Submittal

Project Name:

Norwich Cyberfusion Center (Revision 1)

Contractor:

Engineer:

Architect:

Rep/Distributor:

Project Detail:

Customer:

Address:

City:

State:

Zip:

Submittal Date:

7/11/2024

Submitted By:

Name:	Mackenzie Sutter
Company:	Mitusbishi Electric Trane HVAC US
Email:	msutter@hvac.mea.com
Phone:	207-804-6249
Submittal Stage:	Design Only

Written Specifications

Table of Contents

Part 1 - General 2

1.01 SYSTEM DESCRIPTION R2-SERIES (HYPER-HEAT SIMULTANEOUS HEAT/COOL) 2

1.02 QUALITY ASSURANCE 3

1.03 DELIVERY, STORAGE AND HANDLING....4

Part 2 - Warranty....4

Part 3 - Outdoor Units....5

3.01 R2-SERIES HYPER HEAT SIMULTANEOUS HEATING/COOLING (HEAT RECOVERY), AIR-COOLED OUTDOOR UNITS 5

3.02 BRANCH CIRCUIT (BC) CONTROLLERS AS REQUIRED FOR SIMULTANEOUS HEAT/COOL SYSTEMS 11

Part 4 - Indoor Units....13

4.01 4-WAY CEILING-RECESSED CASSETTE WITH GRILLE FOR 2X2 GRID INDOOR UNIT....13

4.02 MEDIUM STATIC CEILING-CONCEALED DUCTED INDOOR UNIT 15

Part 5 - Controls 17

5.01 OVERVIEW....17

5.02 ELECTRICAL CHARACTERISTICS 18

5.03 CITY MULTI CONTROLS NETWORK....18

5.04 CMCN: REMOTE CONTROLLERS....19

5.05 CENTRALIZED CONTROLLER (WEB-ENABLED) 21

5.06 GRAPHICAL USER INTERFACE....30

5.07 ENERGY APPOINTMENT METHOD FOR CITY MULTI CENTRALIZED CONTROLLERS 33

5.08....37

5.09 CMCN: SYSTEM INTEGRATION 37

General

SYSTEM DESCRIPTION R2-SERIES (HYPER-HEAT SIMULTANEOUS HEAT/COOL)

Per the equipment schedule, the variable capacity, heat pump heat recovery air conditioning system basis of design is Mitsubishi Electric CITY MULTI VRF (Variable Refrigerant Flow) zoning system(s).

Acceptable alternative manufacturers, assuming compliance with these equipment specifications, are Daikin, Panasonic, and Hitachi. Contractor bidding an alternate manufacturer does so with full knowledge that that manufactures product may not be acceptable or approved and that contractor is responsible for all specified items and intents of this document without further compensation.

Simultaneous heating/cooling (heat recovery) systems shall consist of an outdoor unit, BC (Branch Circuit) Controller (or comparable branch devices), multiple indoor units, and an integral DDC (Direct Digital Controls) system. Each indoor unit or group of indoor units shall be capable of operating in any mode independently of other indoor units or groups. System shall be capable of changing mode (cooling to heating, heating to cooling) with no interruption to system operation.

Air-source VRF system shall be designed specifically for cold weather heating performance. Bidding “over-sized” systems (providing outdoor units with greater nominal tonnage than the basis of design) to meet system heat requirements is permissible on a voluntary alternate basis only and bid must be accompanied by equipment PLR curves and project energy analysis (completed with Trace 700 or EnergyPro) quantifying energy penalty resulting from associated cycling of over-sized system during mild ambient temperatures. To ensure owner comfort, each indoor unit or group of indoor units shall be independently controlled and capable of changing mode automatically when zone temperature strays 1.8 degrees F from set point for ten minutes.

No additional branch circuit controllers (or comparable branch devices) than shown on the drawings/schedule may be connected to any one outdoor unit. Contractors proposing alternate systems requiring more branch devices than those included as the basis of design are responsible for additional piping & electrical costs and are required to identify additional costs & installation time required of other trades with their bid.

QUALITY ASSURANCE

The units shall be listed by Electrical Testing Laboratories (ETL) and bear the ETL label.

All wiring shall be in accordance with the National Electrical Code (N.E.C.).

The units shall be manufactured in a facility registered to ISO 9001 and ISO14001 which is a set of standards applying to environmental protection set by the International Standard Organization (ISO).

All units must meet or exceed the 2010 Federal minimum efficiency requirements and the ASHRAE 90.1 efficiency requirements for VRF systems. Efficiency shall be published in accordance with the Air-Conditioning, Heating, and Refrigeration Institute (AHRI) Standard 1230.

System start-up supervision shall be a required service to be completed by the manufacturer or a duly authorized, competent representative that has been factory trained in system configuration and operation. The representative shall provide proof of manufacturer certification indicating successful completion within no more than two (2) years prior to system installation. This certification shall be included as part of the equipment and/or controls submittals.

DELIVERY, STORAGE AND HANDLING

Unit shall be stored and handled according to the manufacturer's recommendation.

Warranty

The CITY MULTI units shall be covered by the manufacturer's limited warranty for a period of one (1) year parts and seven (7) year compressor to the original owner from date of installation.

Installing contractor shall meet manufacturer requirements to obtain extended manufacturer's limited parts and compressor warranty for a period of ten (10) years to the original owner from date of installation. This warranty shall not include labor.

Manufacturer shall have a minimum of fifteen (15) years continuous experience providing VRF systems in the U.S. market.

All manufacturer technical and service manuals must be readily available for download by any local contractor should emergency service be required. Registering and sign-in requirements which may delay emergency service reference are not allowed.

The CITY MULTI VRF system shall be installed by a contractor with extensive CITY MULTI install and service training. The mandatory contractor service and install training should be performed by the manufacturer.

Outdoor Units

R2-SERIES HYPER HEAT SIMULTANEOUS HEATING/COOLING (HEAT RECOVERY), AIR-COOLED OUTDOOR UNITS

General:

The outdoor unit modules shall be air-cooled, direct expansion (DX), multi-zone units used specifically with VRF components described in this section and Part 5 (Controls). The outdoor unit modules shall be equipped with a single compressor which is inverter-driven and multiple circuit boards—all of which must be manufactured by the branded VRF manufacturer. Each outdoor unit module shall be completely factory assembled, piped and wired and run tested at the factory.

Outdoor unit systems may be comprised of multiple modules with differing capacity if a brand other than basis of design is proposed. All units requiring a factory supplied twinning kits shall be piped together in the field, without the need for equalizing line(s). If an alternate manufacturer is selected, any additional material, cost, and labor to install additional lines shall be incurred by the contractor. Contractor responsible for ensuring alternative brand compatibility in terms of availability, physical dimensions, weight, electrical requirements, etc.

Outdoor unit shall have a sound rating no higher than 65 dB(A) individually or 68 dB(A) twinned. Units shall have a sound rating no higher than 51 dB(A) individually or 54 dB(A) twinned while in night mode operation. Units shall have 5 levels sound adjustment via dip switch selectable fan speed settings. If an alternate manufacturer is selected, any additional material, cost, and labor to meet published sound levels shall be incurred by the contractor.

Refrigerant lines from the outdoor unit to the BC (Branch Circuit) Controller or comparable branch devices shall be insulated in accordance with the installation manual.

The outdoor unit shall have the capability of installing the main refrigerant piping through the bottom of the unit.

The outdoor unit shall have an accumulator with refrigerant level sensors and controls. Units shall actively control liquid level in the accumulator via Linear Expansion Valves (LEV) from the heat exchanger.

The outdoor unit shall have a high pressure safety switch, over-current protection, crankcase heater and DC bus protection.

VRF system shall meet performance requirements per schedule and be within piping limitations & acceptable ambient temperature ranges as described in respective manufacturers' published product catalogs. Non-published product capabilities or performance data are not acceptable.

The outdoor unit shall be capable of continuous operation in heating mode down to -31°F ambient temperatures, simultaneous heating/cooling mode from -4-70°F ambient temperatures, and cooling mode up to 126°F without additional restrictions on line length & vertical separation beyond those published in respective product catalogs. Models with capacity data for required temperature range published as "for reference only" are not considered capable of continuous operation at those conditions and are not acceptable. If an alternate manufacturer is selected, any additional material, cost, and labor to meet ambient operating range and performance shall be incurred by the contractor.

The outdoor unit shall have a high efficiency oil separator plus additional logic controls to ensure adequate oil volume in the compressor is maintained. Oil return sequences must be enabled only during extended periods of reduced refrigerant flow to ensure no disruption to correct refrigerant flow to individual zones during peak loads. Systems which might engage oil return sequence based on hours of operation risk oil return during inopportune periods are not allowed. Systems which rely on sensors (which may fail) to engage oil return sequence are not allowed.

Unit must defrost all circuits simultaneously in order to resume full heating more quickly during extreme low ambient temperatures (below 23F). Partial defrost, also known as hot gas defrost which allows reduced heating output during defrost, is permissible only when ambient temperature is above 23F.

While in hot gas defrost the system shall slow the indoor unit fan speed down to maintain a high discharge air temperature, systems that keep fan running in same state shall not be allowed as they provide an uncomfortable draft to the indoor zone due to lower discharge air temperatures

In reverse defrost all refrigerant shall be bypassed in the main branch controller and shall not be sent out to the indoor units, systems that flow refrigerant through indoor units during reverse defrost shall not be allowed.

The outdoor unit shall be provided with a manufacturer supplied 20 gauge hot dipped galvanized snow /hail guard. The snow/hail guard protects the outdoor coil surfaces from hail damage and snow build-up in severe climates.

VRF four-legged outdoor unit mounting systems shall be provided by manufacturer. Stand shall be made from 7 gauge plate steel with thermally fused polyester powder coat finish that meets ASTM D3451-06 standards. Stands shall be provided with galvanized mounting hardware and meets all ASCE 7 overturning safety requirement.

Unit Cabinet:

The casing(s) shall be fabricated of galvanized steel, bonderized and finished.

Outdoor unit components shall be coated with the Seacoast Protection Coating (Brine Spray – BS coating) to protect components from premature corrosion due to a seacoast environment. Coating shall be applied to components before original outdoor unit assembly to ensure manufacturer quality standards are not compromised and shall meet the following minimum requirements:

≥85µm thermoset polyester-resin powder coating on External Front Panel

≥70μm thermoset polyester-resin powder coating on External Panel Base, Pillar, Compressor Cover, Fan Motor Support, Electrical Box

≥1μm cellulose and polyurethane-resin coating on heat exchanger fins

≥10μm polyurethane coating on printed circuit boards

The outdoor unit shall be tested in compliance with ISO9277 such that no unusual rust shall develop after 960 hours of salt spray testing.

Panels on the outdoor unit shall be scratch free at system startup. If a scratch occurs the salt spray protection is compromised and the panel should be replaced immediately.

Fan:

Each outdoor unit module shall be furnished with direct drive, variable speed propeller type fan(s) only. Fans shall be factory set for operation at 0 in. wg external static pressure, but capable of normal operation with a maximum of 0.32 in. WG external static pressure via dipswitch.

All fan motors shall have inherent protection, have permanently lubricated bearings, and be completely variable speed.

All fans shall be provided with a raised guard to prevent contact with moving parts.

Refrigerant and Refrigerant Piping:

R410A refrigerant shall be required for systems.

Polyolester (POE) oil—widely available and used in conventional domestic systems—shall be required. Prior to bidding, manufacturers using alternate oil types shall submit material safety data sheets (MSDS) and comparison of hygroscopic properties for alternate oil with list of local suppliers stocking alternate oil for approval at least two weeks prior to bidding.

Refrigerant piping shall be phosphorus deoxidized copper (copper and copper alloy seamless pipes) of sufficient radial thickness as defined by the VRF equipment manufacturer and installed in accordance with manufacturer recommendations.

All refrigerant piping must be insulated with ½" closed cell, CFC-free foam insulation with flame-Spread Index of less than 25 and a smoke-development Index of less than 50 as tested by ASTM E 84 and CAN / ULC S-102. R value of insulation must be at least 3.

Refrigerant line sizing shall be in accordance with manufacturer specifications. Future changes to indoor unit styles or sizes must be possible without resizing/replacing refrigerant piping to any other branch devices or indoor units.

Coil:

Outdoor Coil shall be constructed to provide equal airflow to all coil face surface are by means of a 4-sided coil.

Outdoor Coil shall be elevated at least 12" from the base on the unit to protect coil from freezing and snow build up in cold climates. Manufacturer's in which their coil extends to within a few inches from the bottom of their cabinet frame shall provide an additional 12" of height to their stand or support structure to provide equal protection from elements as Mitsubishi Electric basis of design. Any additional support costs, equipment fencing, and tie downs required to meet this additional height shall be responsibility of Mechanical Contractor to provide.

The outdoor coil shall be of nonferrous construction with lanced or corrugated plate fins on copper tubing.

The coil fins shall have a factory applied corrosion resistant blue-fin finish. Uncoated aluminum coils/fins are not allowed.

The coil shall be protected with an integral metal guard.

Refrigerant flow from the outdoor unit shall be controlled by means of an inverter driven compressor.

Unit shall have prewired plugs for optional panel heaters in order to prevent any residual ice buildup from defrost. Panel heaters are recommended for operating environments where the ambient temperature is expected to stay below -1F for 72 hours.

Condenser coil shall have active hot gas circuit direct from compressor discharge on lowest coil face area to shed defrost condensate away from coil and protect from Ice formation after returning to standard heat pump operation. While in Heat Pump operation this lower section of the Outdoor Evaporator coil shall continually run hot gas from the compressor discharge to protect the coil from ice buildup and coil rupture. Manufacturers who do not have an active hot gas circuit in the lower section of the Outdoor coil to protect coil from freezing shall not be allowed to bid on project in markets where the outdoor unit will see temperatures below freezing.

Compressor:

Each outdoor unit module shall be equipped with only inverter driven scroll hermetic compressors. Non inverter-driven compressors, which may cause inrush current (demand charges) and require larger generators for temporary power shall not be allowed.

Each compressor shall be equipped with a multi-port discharge mechanism to eliminate over compression at part load. Manufacturer's that rely on a single compressor discharge port and provide no means of eliminating over compression and energy waste at part load shall not be allowed.

Compressor (or compressor circuit) must utilize hot gas injection circuit or two-stage compression to allow compression ratio (thus heating output) to increase during extreme cold ambient temperatures.

Crankcase heat shall be provided via induction-type heater utilizing eddy currents from motor windings. Energy-wasting "belly-band" type crankcase heaters are not allowed. Manufacturers that utilize belly-band crankcase heaters will be considered as alternate only.

All compressors shall have an inverter to modulate capacity. The capacity for each module/system shall be variable with a minimum turndown not greater than 15% of the scheduled nominal capacity.

The compressor shall be equipped with an internal thermal overload.

Field-installed oil equalization lines between modules are not allowed. Prior to bidding, manufacturers requiring equalization must submit oil line sizing calculations specific to each system and module placement for this project.

Manufacturers that utilize a compressor sump oil sensor to equalize compressor oil volume within a single module shall not be allowed unless they actively shut down the system to protect from compressor failure.

Panel Heater:

Each outdoor unit module shall be equipped with a panel heater to protect coil against ice build-up during prolonged winter operation. Panel heater shall activate only if compressor is operating in heating mode at an outdoor ambient temperature of 39F or below

Controls:

The unit shall be an integral part of the system & control network described in Part 5 (Controls) and react to heating/cooling demand as communicated from connected indoor units over the control circuit. Required field-installed control voltage transformers and/or signal boosters shall be provided by the manufacturer.

Each outdoor unit module shall have the capability of 4 levels of demand control based on external input.

Electrical:

The outdoor unit electrical power shall be 208/230 volts, 3-phase, 60 hertz or 460 volts, 3-phase, 60 hertz per equipment schedule.

The outdoor unit shall be controlled by integral microprocessors.

The control circuit between the indoor units, BC Controller and the outdoor unit shall be 24VDC completed using a 2-conductor, twisted pair shielded cable to provide total integration of the system.

BRANCH CIRCUIT (BC) CONTROLLERS AS REQUIRED FOR SIMULTANEOUS HEAT/COOL SYSTEMS

General

BC (Branch Circuit) Controllers (or comparable branch devices) shall include multiple branches to allow simultaneous heating and cooling by allowing either hot gas refrigerant to flow to indoor unit(s) for heating or subcooled liquid refrigerant to flow to indoor unit(s) for cooling. Refrigerant used for cooling must always be subcooled for optimal indoor unit LEV performance; alternate branch devices which do not include controlled refrigerant subcooling risk bubbles in liquid supplied to indoor unit LEVs and are not allowed.

BC Controllers (or comparable branch devices) shall be equipped with a circuit board that interfaces to the controls system and shall perform all functions necessary for operation. The unit shall have a galvanized steel finish and be completely factory assembled, piped and wired. Each unit shall be run tested at the factory. This unit shall be mounted indoors, with access and service clearance provided for each controller. BC Controllers (or comparable branch devices) shall be suitable for use in plenums in accordance with UL1995 ed 4.

BC Unit Cabinet:

The casing shall be fabricated of galvanized steel.

Each cabinet shall house a liquid-gas separator and multiple refrigeration control valves.

The unit shall house two tube-in-tube heat exchangers.

Refrigerant Piping (specifications in addition to those for outdoor unit):

All refrigerant pipe connections shall be brazed.

Future changes to indoor unit quantities or sizes served by BC Controller or comparable branch device must be possible with no piping changes except between the branch device and indoor unit(s) changing. Systems which might require future piping changes between branch device and outdoor unit—if changes to indoor unit quantities or sizes are made—are not considered equal and are not allowed.

Refrigerant valves:

Service shut-off valves shall be field-provided/installed for each branch to allow service to any indoor unit without field interruption to overall system operation.

Condensate Management:

BC Controller (or comparable branch device) must have integral resin drain pan or insulate refrigeration components with removable insulation that allows easy access for future service needs. Cabinets filled with solid foam insulation do not allow for future service and are not allowed.

Electrical:

The unit electrical power shall be 208/230 volts, 1 phase, 60 Hertz. The unit shall be capable of satisfactory operation within voltage limits of 187-228 (208V/60Hz) or 207-253 (230/60Hz).

The BC Controller shall be controlled by integral microprocessors

The control circuit between the indoor units and outdoor units shall be 24VDC completed using a 2-conductor, twisted pair shielded cable to provide total.

Indoor Units

4-WAY CEILING-RECESSED CASSETTE WITH GRILLE FOR 2X2 GRID INDOOR UNIT

General:

The indoor unit shall be a four-way cassette style indoor unit that recesses into the ceiling with a ceiling grille. The indoor unit shall be factory assembled, wired and run tested. Contained within the unit shall be all factory wiring, piping, electronic modulating linear expansion device, control circuit board and fan motor. The unit shall have a self-diagnostic function, 3-minute time delay mechanism, an auto restart function, an emergency operation function and a test run switch. Indoor unit and refrigerant pipes shall be charged with dehydrated air before shipment from the factory. The unit shall be suitable for use in plenums in accordance with UL1995 ed 4.

Unit Cabinet:

The cabinet shall be a compact 22-7/16" wide x 22-7/16" deep so it will fit within a standard 24" square suspended ceiling grid.

The cabinet panel shall have provisions for a field installed filtered outside air intake.

Four-way grille shall be fixed to bottom of cabinet allowing two, three or four-way blow.

Fan:

The indoor fan shall be an assembly with a turbo fan direct driven by a single motor.

The indoor fan shall be statically and dynamically balanced to run on a motor with permanently lubricated bearings.

The indoor fan shall be capable of three (3) speed settings, Low, Mid, and High.

The indoor unit shall have an adjustable air outlet system offering 4-way airflow, 3-way airflow, or 2-way airflow.

The indoor unit vanes shall have 5 fixed positions and a swing feature that shall be capable of automatically swinging the vanes up and down for uniform air distribution.

Grille shall include an optional "3D i-see" sensor, or equal, to work in conjunction with indoor unit control sequence to prevent unnecessary cooling or heating in unoccupied areas of the zone without decreasing comfort levels. Sensor must detect occupancy (not simply motion) and location of occupants by measuring size & temperature of objects within a 39' detecting diameter (based on 8.8ft mounting height) with 1,856 or more measuring points.

Filter:

Return air shall be filtered by means of a long-life washable filter.

Coil:

The indoor coil shall be of nonferrous construction with smooth plate fins on copper tubing. The tubing shall have inner grooves for high efficiency heat exchange. All tube joints shall be brazed with phos-copper or silver alloy.

The coils shall be pressure tested at the factory.

The unit shall be provided with an integral condensate lift mechanism that will be able to raise drain water 19-3/4" inches above the condensate pan.

Electrical:

The unit electrical power shall be 208/230 volts, 1-phase, 60 hertz.

The system shall be capable of satisfactory operation within voltage limits of 187-228 volts (208V/60Hz) or 207-253 volts (230V/60Hz).

Controls:

Indoor unit shall compensate for the higher temperature sensed by the return air sensor compared to the temperature at level of the occupant when in HEAT mode. Disabling of compensation shall be possible for individual units to accommodate instances when compensation is not required.

Control board shall include contacts for control of external heat source. External heat may be energized as second stage with 1.8°F – 9.0°F adjustable deadband from set point.

Indoor unit shall include no less than four (4) digital inputs capable of being used for customizable control strategies.

Indoor unit shall include no less than three (3) digital outputs capable of being used for customizable control strategies.

A factory-installed drain pan sensor shall provide protection against drain pan overflow by sensing a high condensate level in the drain pan. Should this occur, the control shuts down the indoor unit before an overflow can occur. A thermistor error code will be produced should the sensor activate indicating a fault which must be resolved before the unit re-starts.

MEDIUM STATIC CEILING-CONCEALED DUCTED INDOOR UNIT

General:

The ceiling-concealed ducted indoor unit shall be factory assembled, wired and run tested. Contained within the unit shall be all factory wiring, piping, electronic modulating linear expansion device, control circuit board and fan motor. The unit shall have a self-diagnostic function, 3-minute time delay mechanism, and an auto restart function. Indoor unit and refrigerant pipes shall be charged with dehydrated air before shipment from the factory. The unit shall be suitable for use in plenums in accordance with UL1995 ed 4.

Unit Cabinet:

The unit shall be ceiling-concealed, ducted—with a 2-position, field adjustable return and a fixed horizontal discharge supply.

The cabinet panel shall have provisions for a field installed filtered outside air intake.

Fan:

Indoor unit shall feature multiple external static pressure settings ranging from 0.14 to 0.60 in. WG.

The indoor unit fan shall be an assembly with statically and dynamically balanced Sirocco fan(s) direct driven by a single motor with permanently lubricated bearings.

The indoor fan shall consist of three (3) speeds, High, Mid, and Low plus the Auto-Fan function

Filter:

Return air shall be filtered by means of a standard factory installed return air filter.

Optional return filter box (rear or bottom placement) with high-efficiency filter as noted on equipment schedule.

Coil:

The indoor coil shall be of nonferrous construction with smooth plate fins on copper tubing. The tubing shall have inner grooves for high efficiency heat exchange. All tube joints shall be brazed with phos-copper or silver alloy.

The coils shall be pressure tested at the factory.

Coil shall be provided with a sloped drain pan. Units without sloped drain pans which must be installed cockeyed to ensure proper drainage are not allowed.

The unit shall be provided with an integral condensate lift mechanism able to raise drain water 27 inches above the condensate pan.

Electrical:

The unit electrical power shall be 208/230 volts, 1-phase, 60 hertz.

The system shall be capable of satisfactory operation within voltage limits of 187-228 volts (208V/60Hz) or 207-253 volts (230V/60Hz).

Controls:

Indoor unit shall compensate for the higher temperature sensed by the return air sensor compared to the temperature at level of the occupant when in HEAT mode. Disabling of compensation shall be possible for individual units to accommodate instances when compensation is not required.

Control board shall include contacts for control of external heat source. External heat may be energized as second stage with 1.8°F – 9.0°F adjustable deadband from set point.

Indoor unit shall include no less than four (4) digital inputs capable of being used for customizable control strategies.

Indoor unit shall include no less than three (3) digital outputs capable of being used for customizable control strategies.

Control board shall include contacts for control of no less than two stages of external heat. The first stage of external heat may be energized when the space temperature is 2.7°F from set point for between 10-25 minutes (user adjustable). The second stage of external heat may be energized when the first stage has been active for no less than 5 minutes and the space temperature has not risen by more than 0.9°F.

Indoor unit shall include no less than four (4) digital inputs capable of being used for customizable control strategies.

Indoor unit shall include no less than three (3) digital outputs capable of being used for customizable control strategies.

Controls

OVERVIEW

The control system shall consist of a low voltage communication network and a web-based interface. The controls system shall gather data and generate web pages accessible through a conventional web browser on each PC connected to the network. Operators shall be able to perform all normal operator functions through the web browser interface.

Furnish energy conservation features such as optimal start, request-based logic, and demand level adjustment of overall system capacity as specified in the sequence.

System shall be capable of email generation for remote alarm annunciation.

ELECTRICAL CHARACTERISTICS

General:

Controller power and communications shall be via a common non-polar communications bus and shall operate at 30VDC.

Wiring:

Control wiring shall be installed in a daisy chain configuration from indoor unit to indoor unit, to the BC controller (main and subs, if applicable) and to the outdoor unit. Control wiring to remote controllers shall be run from the indoor unit terminal block to the controller associated with that unit.

Control wiring for centralized controllers shall be installed in a daisy chain configuration from outdoor unit to outdoor unit, to the system controllers (centralized controllers and/or integrated web based interface), to the power supply.

Wiring type:

Wiring shall be 2-conductor (16 AWG), twisted, stranded, shielded wire as defined by the Diamond System Builder output.

Network wiring shall be CAT-5 with RJ-45 connection.

CITY MULTI CONTROLS NETWORK

The CITY MULTI Controls Network (CMCN) consists of remote controllers, centralized controllers, and/or integrated web based interface communicating over a high-speed communication bus. The CITY MULTI Controls Network shall support operation monitoring, scheduling, occupancy, error email distribution, personal web browsers, tenant billing, online maintenance support, and integration with Building Management Systems (BMS) using either LonWorks® or BACnet® interfaces. The below figure illustrates a sample CMCN System Configuration.

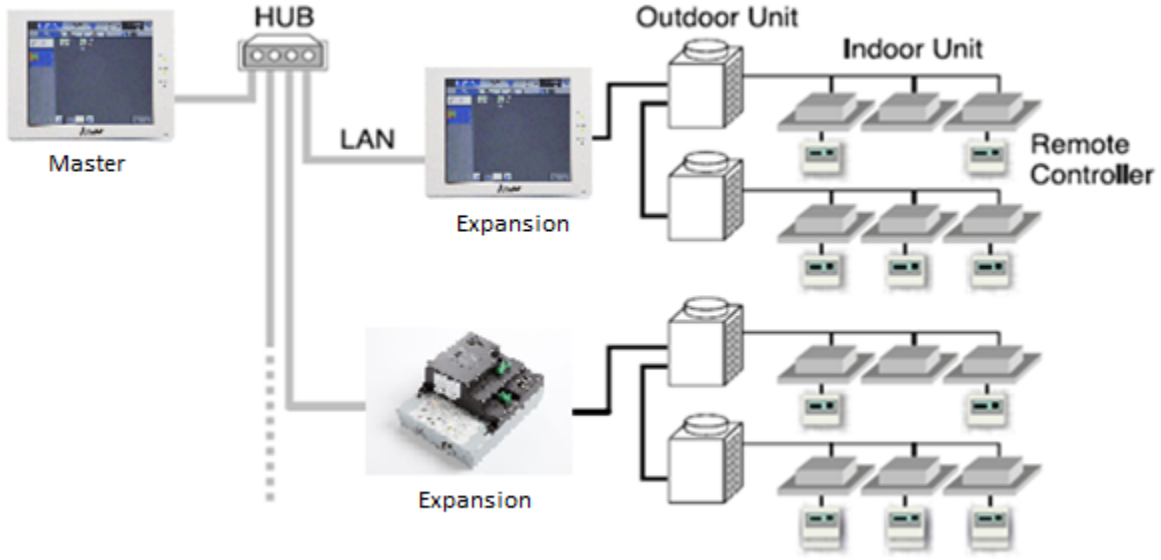

CMCN System Configuration

CMCN: REMOTE CONTROLLERS

Simple MA Remote Controller:

The Backlit Simple MA Remote Controller shall be capable of controlling up to 16 indoor units (defined as 1 group).

The Backlit Simple MA Remote Controller shall only be used in same group with Wireless MA Remote Controllers or with other Backlit Simple MA Remote Controllers, with up to two remote controllers per group.

Simple MA Remote Controller			
Item	**Description**	**Operation**	**Display**
ON/OFF	Run and stop operation for a single group	Each Group	Each Group
Operation Mode	Switches between Cool/Drying/Auto/Fan/Heat/Setback. Operation modes vary depending on the air conditioner unit. Auto and Setback mode are available for the R2/WR2-Series only.	Each Group	Each Group
Temperature Setting	Sets the temperature from 40°F – 95°F depending on operation mode and indoor unit. Separate COOL and HEAT mode set points available depending on central controller and connected mechanical equipment.	Each Group	Each Group
Fan Speed Setting	Available fan speed settings depending on indoor unit.	Each Group	Each Group
Air Flow Direction Setting	Air flow direction settings vary depending on the indoor unit model.	Each Group	Each Group
Permit / Prohibit Local Operation	Individually prohibit operation of each local remote control function (Start/Stop, Change operation mode, Set temperature, Reset filter). *1: Centrally Controlled is displayed on the remote controller for prohibited functions.	N/A	Each Group *1
Display Indoor Unit Intake Temp	Measures and displays the intake temperature of the indoor unit when the indoor unit is operating.	N/A	Each Group
Display Backlight	Pressing the button lights up a backlight. The light automatically turns off after a certain period of time. (The brightness settings can be selected from Bright, Dark, and Light off.)	N/A	Each Unit
Error	When an error is currently occurring on an air conditioner unit, the afflicted unit and the error code are displayed	N/A	Each Unit
Test Run	Operates air conditioner units in test run mode. *2 The display for test run mode will be the same as	Each Group	Each Group *2

	for normal start/stop (does not display “test run”).		
Ventilation Equipment	Up to 16 indoor units can be connected to an interlocked system that has one LOSSNAY unit.	Each Group	N/A
Set Temperature Range Limit	Set temperature range limit for cooling, heating, or auto mode.	Each Group	Each Group

CENTRALIZED CONTROLLER (WEB-ENABLED)

Master Centralized Controller:

The Master Centralized Controller shall be capable of controlling a maximum of two hundred (200) indoor units across multiple CITY MULTI outdoor units with the use of three expansion controllers. The Master Centralized Controller shall be approximately 11-5/32” x 7-55/64” x 2-17/32” in size and shall be powered with an integrated 100-240 VAC power supply. The Master Centralized Controller shall support system configuration, daily/weekly scheduling, monitoring of operation status, night setback settings, free contact interlock configuration and malfunction monitoring. When being used alone without the expansion controllers, the Master Centralized Controller shall have five basic operation controls which can be applied to an individual indoor unit, a collection of indoor units (up to 50 indoor units), or all indoor units (collective batch operation). This basic set of operation controls for the Master Centralized Controller shall include on/off, operation mode selection (cool, heat, auto (R2/WR2-Series only), dry, setback (R2/WR2-Series only) and fan), temperature setting, fan speed setting, and airflow direction setting. Since the master provides centralized control it shall be able to enable or disable operation of local remote controllers. In terms of scheduling, the Master Centralized Controller shall allow the user to define both daily and weekly schedules (up to 24 scheduled events per day) with operations consisting of ON/OFF, mode selection, temperature setting, air flow (vane) direction, fan speed, and permit/prohibit of remote controllers.

Master Centralized Controller			
Item	**Description**	**Operation**	**Display**
ON/OFF	Run and stop operation.	Each Block, Group or Collective	Each Group or Collective

Operation Mode	Switches between Cool/Dry/Auto/Fan/Heat. (Group of Lossnay unit: automatic ventilation/vent-heat/interchange/normal ventilation) Operation modes vary depending on the air conditioner unit. Auto mode is available for the R2/WR2-Series only.	Each Block, Group or Collective	Each Group
Temperature Setting	Sets the temperature from 57°F – 87°F depending on operation mode and indoor unit.	Each Block, Group or Collective	Each Group
Fan Speed Setting	Available fan speed settings depending on indoor unit.	Each Block, Group or Collective	Each Group
Air Flow Direction Setting	Air flow direction settings vary depending on the indoor unit model. *1. Louver cannot be set.	*1 Each Block, Group or Collective	Each Group
Schedule Operation	Annual/weekly/today schedule can be set for each group of air conditioning units. Optimized start setting is also available. *1. The system follows either the current day, annual schedule, or weekly, which are in the descending order of overriding priority. Twenty-four events can scheduled per day, including ON/OFF, Mode, Temperature Setting, Air Direction, Fan Speed and Operation Prohibition. Five types of weekly schedule (seasonal) can be set. Settable items depend on the functions that a given air conditioning unit supports.	*2 Each Block, Group or Collective	Each Group
Optimized Start	Unit starts 5 - 60 minutes before the scheduled time based on the operation data history in order to reach the scheduled temperature at the scheduled time.	Each Block, Group or Collective	Each Block, Group or Collective
Night Setback Setting	The function helps keep the indoor temperature in the temperature range while the units are stopped and during the time this function is effective.	Each Group	Each Group

Permit / Prohibit Local Operation	Individually prohibit operation of each local remote control function (Start/Stop, Change operation mode, Set temperature, Reset filter). *3. Centrally Controlled is displayed on the remote controller for prohibited functions.	Each Block, Group or Collective	*3 Each Group
Room Temp	Displays the room temperature of the group. Space temperature displayed on the indoor unit icon on the touch screen interface.	N/A	Each Group
Error	When an error is currently occurring on an air conditioner unit, the afflicted unit and the error code are displayed *4. When an error occurs, the LED flashes. The operation monitor screen shows the abnormal unit by flashing it. The error monitor screen shows the abnormal unit address, error code and source of detection. The error log monitor screen shows the time and date, the abnormal unit address, error code and source of detection	N/A	*4 Each Unit or Collective
Outdoor Unit Status	Compressor capacity percentage and system pressure (high and low) pressure (excludes S-Series)	Each ODU	Each ODU
Connected Unit Information	MNET addresses of all connected systems	Each IDU, ODU and BC	Each IDU, ODU and BC
Ventilation Equipment	This interlocked system settings can be performed by the master system controller. When setting the interlocked system, use the ventilation switch the free plan LOSSNAY settings between “Hi”, “Low” and “Stop”. When setting a group of only free plan LOSSNAY units, you can switch between “Normal ventilation”, “Interchange ventilation” and “Automatic ventilation”.	Each Group	Each Group
Multiple Language	Other than English, the following languages can be selected: Spanish, French, Japanese, Dutch, Italian, Russian, Chinese, and Portuguese.	N/A	Collective

External Input / Output	By using accessory cables you can set and monitor the following. Input By level: “Batch start/stop”, “Batch emergency stop” By pulse: “batch start/stop”, “Enable/disable remote controller” Output: “start/stop”, “error/Normal” *5. Requires the external I/O cables (PAC-YG10HA-E) sold separately.	*5 Collective	*5 Collective

All Master Centralized Controllers shall be equipped with two RJ-45 Ethernet ports to support interconnection with a network PC via a closed/direct Local Area Network (LAN) or to a network switch for IP communication to up to three expansion controllers for display of up to two hundred (200) indoor units on the main master centralized controller interface.

The Master Centralized Controller shall be capable of performing initial settings via the high-resolution, backlit, color touch panel on the controller or via a PC browser using the initial settings.

Standard software functions shall be available so that the building manager can securely log into each master centralized controller via the PC's web browser to support operation monitoring, scheduling, error email, interlocking and online maintenance diagnostics. Additional optional software functions of personal browser for PCs and MACs and Energy shall be available but are not included. The Energy Apportionment function shall require a LIC-Charge software license

Expansion Controller:

The Expansion Controller shall serve as a standalone centralized controller or as an expansion module to the Master Centralized Controller for the purpose of adding up to 50 indoor units to either the main touch screen interface of the master centralized controller. Up to three (3) expansion controllers can be connected to the master via a local IP network (and their IP addresses assigned on the master) to the master to allow for up to two hundred (200) indoor units to be monitored and controlled from the master interface.

The expansion controllers have all of the same capabilities to monitor and control their associated indoor units as the features specified above. Even when connected to the master and configured to display their units on the main controller, the individual indoor units connected to the expansion can still be monitored and controlled from the interface of the expansion. The last command entered will take precedence, whether at the wall controller, the expansion or the master Centralized Controller.

Non Touch Screen, Networked Centralized Controller:

The Non Touch Screen, Networked Centralized Controller shall be capable of controlling a maximum of 50 indoor units across multiple CITY MULTI outdoor units. The controller shall be approximately 8-1/2"x10" in size and shall be powered by its internal power supply. The controller shall support system configuration, daily/weekly scheduling, monitoring of operation status, free contact interlock configuration and malfunction monitoring. The controller shall have five basic operation controls which can be applied to an individual indoor unit, a group of indoor units (up to 50 indoor units), or all indoor units (collective batch operation). This basic set of operation controls for the controller shall include on/off, operation mode selection (cool, heat, auto (R2/WR2-Series only), dry, temperature setting, fan speed setting, and airflow direction setting. Since the controller provides centralized control it shall be able to enable or disable operation of local remote controllers. In terms of scheduling, the controller shall allow the user to define both daily and weekly schedules with operations consisting of ON/OFF, mode selection, temperature setting, air flow (vane) direction, fan speed, and permit/prohibit of remote controllers.

Non Touch Screen, Networked Centralized Controller			
Item	**Description**	**Operation**	**Display**
ON/OFF	Run and stop operation.	Each Block, Group or Collective	Each Group or Collective
Operation Mode	Indoor unit modes: COOL/DRY/FAN/AUTO/HEAT. Lossnay unit modes: HEAT RECOVERY/BYPASS/AUTO Air to water (PWFY) modes: HEATING/HEATING ECO/HOT WATER/ANTI-FREEZE/COOLING *Operation modes vary depending on the unit model connected. ** Auto mode is available for the R2/WR2-Series only.	Each Block, Group or Collective	Each Group
Temperature Setting	Sets the temperature from 40°F – 95°F depending on operation mode and indoor unit model. Separate COOL and HEAT mode set points available depending on remote controller and connected mechanical equipment.	Each Block, Group or Collective	Each Group
Set Temperature Range Limit	The range of room temperature setting can be limited by the initial setting depending on the indoor unit connected.	Each Group	Each Group
Fan Speed Setting	Available fan speed settings depend on indoor unit model.	Each Block, Group or Collective	Each Group
Air Flow Direction Setting	*Air flow direction settings vary depending on the indoor unit model. *1. Louver cannot be set.	*1 Each Block, Group or Collective	Each Group

Schedule Operation	Annual/weekly/today schedule can be set for each group of air conditioning units. Optimized start setting is also available. *2. The system follows either the current day, annual schedule, or weekly, which are in the descending order of overriding priority. Twenty-four events can scheduled per day, including ON/OFF, Mode, Temperature Setting, Air Direction, Fan Speed and Operation Prohibition. Five types of weekly schedule (seasonal) can be set. Settable items depend on the functions that a given air conditioning unit supports.	*2 Each Block, Group or Collective	Each Group
Hold	Disables scheduled functions for indoor unit groups and their associated remote controller timers. *not available for general equipment	Each Block, Group or Collective	Each Group
Optimized Start	Unit starts 5 - 60 minutes before the scheduled time based on the operation data history in order to reach the scheduled temperature at the scheduled time.	Each Block, Group or Collective	Each Block, Group or Collective
Permit / Prohibit Local Operation	Individually prohibit operation of each local remote control function (Start/Stop, Change operation mode, Set temperature, Fan Speed, Air Direction and Reset filter). *3. Centrally Controlled is displayed on the remote controller for prohibited functions.	Each Block, Group or Collective	*3 Each Group
Room Temp	Displays the room temperature of the group.	N/A	Each Group
Room Humidity	Displays the percent relative humidity in the space as sensed by the Smart ME Remote Controller	N/A	Each Group
Occupancy Sensor	Displays the occupancy icon on the group icon in the condition list page when the room is occupied (blue) or vacant (gray). *The Smart ME Remote Controller Occupancy sensor is required.	N/A	Each Group
Brightness Sensor	Displays the brightness icon on the group icon in the condition list when the space is determined to be bright (yellow) or dark (gray). *The Smart ME Remote Controller Brightness sensor is required.	N/A	Each Group

Error	When an error is currently occurring on an air conditioner unit, the afflicted unit and the error code are displayed *4. When an error occurs, the LED flashes. The operation monitor screen shows the abnormal unit by flashing it. The error monitor screen shows the abnormal unit address, error code and source of detection. The error log monitor screen shows the time and date, the abnormal unit address, error code and source of detection	N/A	*4 Each Unit or Collective
Ventilation Equipment	This interlocked system settings can be performed by the master system controller. When setting the interlocked system, use the ventilation switch the free plan LOSSNAY settings between “Hi”, “Low” and “Stop”. When setting a group of only free plan LOSSNAY units, you can switch between “Normal ventilation”, “Interchange ventilation” and “Automatic ventilation”.	Each Group	Each Group
Multiple Language	Other than English, the following languages can be selected: Spanish, French, Japanese, German, Italian, Russian, Chinese, and Portuguese.	N/A	N/A
External Input / Output	By using accessory cables you can set and monitor the following. Input: By level: “Batch start/stop”, “Batch emergency stop”; By pulse: “batch start/stop”, “Enable/disable remote controller” Output: “start/stop”, “error/Normal” *5. Requires the external I/O cables (PAC-YG10HA-E) sold separately.	*5 Collective	*5 Collective
M-Net	The "M-NET" LED lights, when AC power supply is turned ON. The LED blinks while M-NET is communicating.	N/A	Each Group (LED)
Collective ON/OFF	All the units can be operated / stopped with a DIP switch.	Collective	N/A
Measurement	Displays the Temperature and Humidity inputs of the AI Board. Supports graph display and data export.	N/A	Each Unit
AHC Status	Displays the status of the of the inputs and outputs of each Advanced HVAC Controller (DC-A2IO)	N/A	Each Unit
Free Contact Status	Displays the input/output status of the Free Contacts on the indoor units	N/A	Each Unit

Free Contact Interlock Control	Operation of indoor groups, general equipment or free contact outputs based on group(s) conditions or free contact(s) input states.	Each Group, Output or Collective	N/A
Data Back-up (PC)	Initial setting data can be exported to a PC.	Collective	N/A

All Non Touch Screen, Networked Centralized Controller shall be equipped with two RJ-45 Ethernet port to support interconnection with a network PC and BACnet/IP communication via a closed/direct Local Area Network (LAN). The controller shall be capable of performing initial settings online via a PC using the controller's initial setting browser or online/offline with the Initial Setting Tool.

Standard software functions shall be available so that the building manager can securely log into each controller via the PC's web browser to support operation monitoring, scheduling, error email, interlocking and online maintenance diagnostics. Standard software functions shall not expire. Additional optional software functions of personal browser for PCs and MACs and Energy Allocation shall be available. The Energy Allocation function shall require Master Centralized Controller Energy Allocation Integrated System in conjunction with Non Touch Screen, Networked Centralized Controller.

GRAPHICAL USER INTERFACE

The Graphical User Interface (Integrated Centralized Control Web) shall require a field supplied PC or Tablet.

ICCW

The Integrated Centralized Control Web System (ICCW) interface shall enable the user to control multiple networked central controllers and shall provide additional functions such as energy apportionment from a single network PC configured with the Charge Calculation Tool. The ICCW shall be capable of controlling up to forty networked Centralized Controllers with a maximum of 2,000 indoor units across multiple CITY MULTI outdoor units. The ICCW shall be required if the user wants to simultaneously control more than 1 Centralized Controllers from a single PC or tablet using a single web browser session. Licensing per function, per Centralized Controller shall be required for the ICCW. Optional software features shall be available through the ICCW including energy apportionment and personalized web. These optional software features shall require the ICCW, advance purchase from the customer, and licensing from ICCW.

ICCW (Integrated System Software)	
Item	**Details**
ON/OFF	The units can turn ON and OFF for all floors or in a block, floor, or group of units.
Operation	The operation mode can be switched between COOL, DRY, FAN,

Modes	AUTO, and HEAT for all floors or in a block, floor, or group of units
Temperature Setting	Sets the temperature for a single group. Range of Temperature setting from 57°F – 87°F depending on operation mode and indoor unit model. Separate COOL and HEAT mode set points available depending on remote controller and connected mechanical equipment.
Fan Speed	The fan speed can be set to four stages for all floors or in a block, floor, or group of units
Air Direction	The air direction can be set in four vertical directions or to swing for all floors or in block, floor, or group of units. (The selectable air direction differs according to the model.)
Interlocked Unit ON/OFF LOSSNAY	If there is an interlocked unit (LOSSNAY), then the unit can be turned ON (strong/weak) or OFF for all floors or in a block, floor, or group of units. (Note that the ventilation mode cannot be selected for interlocked units.)
Local Operation Prohibit	The items for which operation with the local remote controller are to be prohibited can be selected for all floors or in a block, floor, or group of units. (The items that can be prohibited are ON/OFF, operation mode, set temperature and filter sign reset.)
Annual / Weekly Schedule	The annual/weekly schedule function can be used by registering the license. Two settings, such as seasonal settings for summer and winter, can be saved.
Power Rate Apportionment Charging	A watt-hour meter (WHM) with kWH pulse output is connected to calculate the air conditioning charges based on the amount each tenant's air-conditioner has operated. Five charging rates can be applied per day. ***OPTIONAL ENERGY APPORTIONMENT SOFTWARE (LIC-CHARGE) and PI Controller (PAC-Y60MCA) REQUIRED
History	Up to 3,000 items for the error history and up to 10,000 items for operation history can be saved. Each history file can be output as a daily report or monthly report in CSV format. (The operation history consists only of the operations carried out with the ICCW and is limited to some limited operation items.)
Operation Time Monitor	The cumulative operation time of each indoor unit can be viewed or output as a CSV format file. (This function is valid only when the

	charging function license is registered.)
Filter Sign Display Mask	The filter sign display at the remote controllers can be disabled.
Set Temperature Limit	The set temperature lower limit can be set for cooling and the upper limit for heating. (ME remote controller required)

ENERGY APPOINTMENT METHOD FOR CITY MULTI CENTRALIZED CONTROLLERS

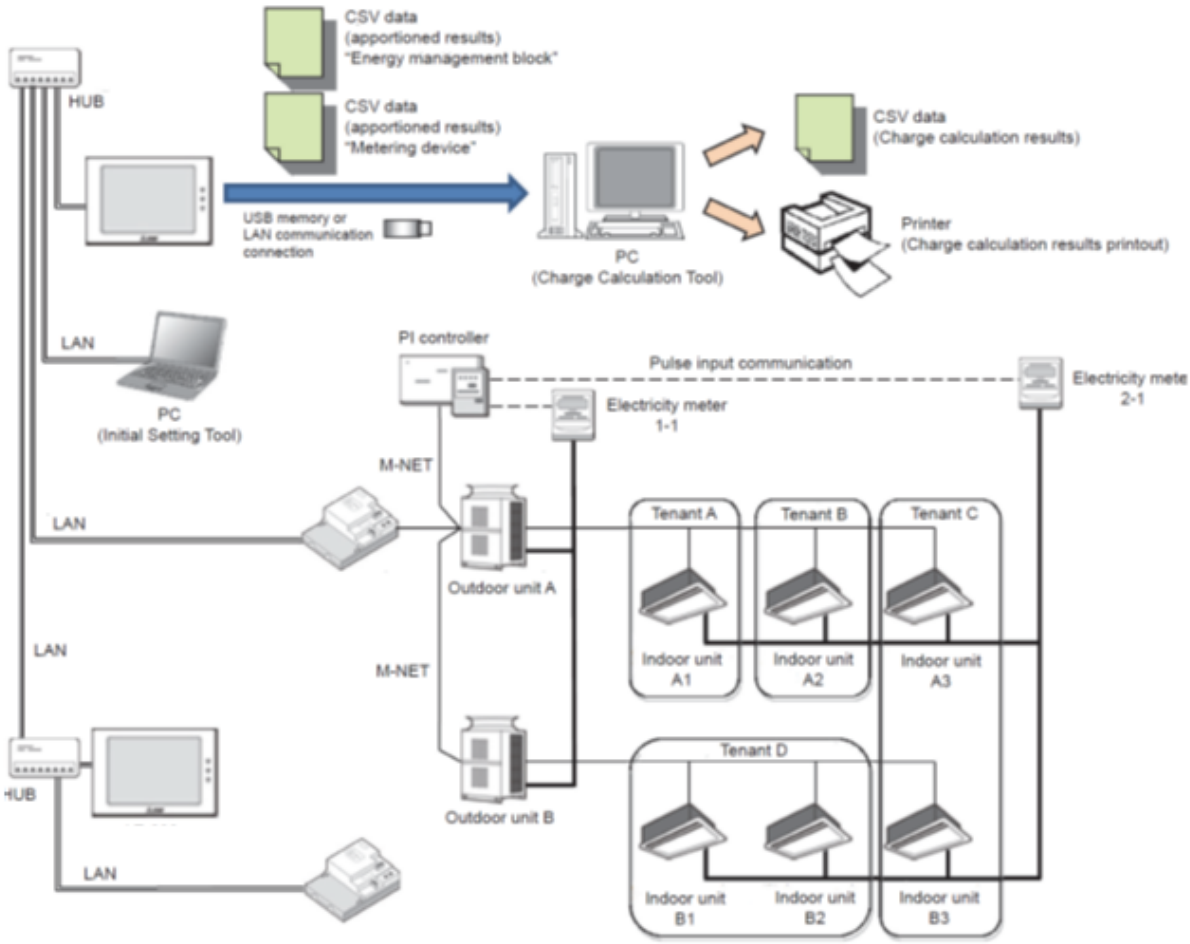

CMCN System Configuration

System Overview

For centralized systems serving multiple tenants for which one-to-one electricity metering is not possible, an apportioned electricity billing function that attributes just the electrical energy consumed by each individual tenant's air conditioner is required. The Energy Apportionment function takes the information on the electrical energy usage gathered from Watt Hour Meters (WHM) connected to dedicated breaker panels serving the system's outdoor units and synthesizes it with the information on the operating status of the indoor units that is collected by the CITY MULTI centralized controller(s).

Watt Hour Meters

Requirements:

The Watt Hour Meters (WHMs) to be used to read the electrical energy consumption of the outdoor units must be capable of a pulse output, which would be configured based on the current rating of the units. The associated current transformers/ transducers (CTs) must also be sized based on the current rating of either the individual outdoor units or the dedicated air conditioning electrical panels they are to be reading. The proper quantity of meters for a particular sized system must be selected in order to ensure sufficient resolution and hysteresis in the unit pulse output of the meters so as to ascribe an acceptable level of accuracy to the apportionment of energy usage for each tenant's system. The system is designed to work with any WHM capable of a pulse output that meets ANSI C12.20 class 0.2% or 0.5% accuracy standards.

Connection:

The WHMs are to be physically connected to the integrated pulse input module or an external Mitsubishi Electric PI Controller if such an input is not available or if there is a wiring length limitation or installation hardship. The cable type of the interconnecting wiring shall be according to the wiring specifications of the WHM manufacturer.

CITY MULTI Centralized Controller Requirements

Licensing:

Each centralized controller to which units are assigned that require the energy apportionment function must have the "LIC-Charge" software license purchased and properly unlocked in order to enable the operating status of the indoor units to be passed to the energy apportionment tool. The procedure for licensing the centralized controllers with this function and the necessary forms can be found on Mitsubishi Electric's technical documentation repository, mylinkdrive.com. Purchase Order information for the licenses will be required at the time of submission of the licensing request forms.

Dedicated master centralized controller for apportionment (no MNET connection)

A dedicated master centralized controller, for which the LIC-Charge license is purchased and the energy apportionment function enabled, must be provided in order to serve as the portal for exporting metering device and energy management data to a USB drive or to a PC via LAN connection. This means that by virtue of selecting this master centralized controller to serve this function, the MNET capability of this particular centralized controller will be disabled. All indoor units must be physically wired via MNET to other expansion centralized controllers, which must be physically wired via LAN with Static IP addresses and a network hub or switch to the master apportionment controller.

PC for collecting charge calculation results

A networked PC, which does not necessarily have to be dedicated to the task of collecting energy apportionment data, can be provided and loaded with the Charge Calculation Tool software for exporting data necessary to generate billing documentation to be performed by a third party. The system requirements of the PC are as follows:

Item	Requirements
CPU	1 GHz or better (at least 2 GHz recommended)
Memory	2GB or more
Screen Resolution	1024 x 768 or better
OS	Windows 7, Windows 8.1 (32bit/64bit)
System requirements	The system should meet the minimum requirement for Windows 7 or Windows 8.1 • Net Framework 4.5 or later
Internal LAN port or LAN card	100 BASE-TX or better
Porting device	Mouse, etc.

CMCN: SYSTEM INTEGRATION

BACnet® Integration:

The Mitsubishi Electric Cooling & Heating BACnet® hardware, which is built into all networked central controllers, shall be compliant with BACnet® Protocol (ANSI/ASHRAE 135-2010) and be Certified by the (BTL) BACnet® Testing Laboratories. The BACnet® interface shall support BACnet Broadcast Management (BBMD). The BACnet® interface shall support a maximum of 50 indoor units. Operation and monitoring points include, but are not limited to, on/off, operation mode, fan speed, prohibit remote controller, filter sign reset, alarm state, error code, and error address.

Licenses:

1. LIC-BACnet Master: Master Controller license for Master Centralized Controller and Non Touch Screen, Networked Centralized Controller
2. LIC-BACnet Expansion: Expansion Controller license for Expansion Controller and Non Touch Screen, Networked Centralized Controller

LIC-BACnet Specifications:

3. Control up to 50 groups
4. 1 to 16 indoor units can be collectively controlled in a group
5. Supports dual set point functionality (connected model dependant)
6. BTL Compliant
7. BACnet communication specifications are based on ANSI/ASHRAE Standards 135-2010

PC Requirements:

8. CPU: 1GHz or higher
9. Memory: 1GB or more
10. HDD Space: 100 MB or more
11. Screen Resolution: 1024 x 768 or higher
12. OS: Microsoft Windows 7 32-bit/64-bit, Microsoft 8.1 32-bit/64-bit. Not compatible with Windows Vista
13. Execution Environment: Microsoft .NET Framework 4.5 or later
14. Others: Pointing device such as a mouse, internet connection (required when installing a .NET Framework)

LIC-BACnet – System Example

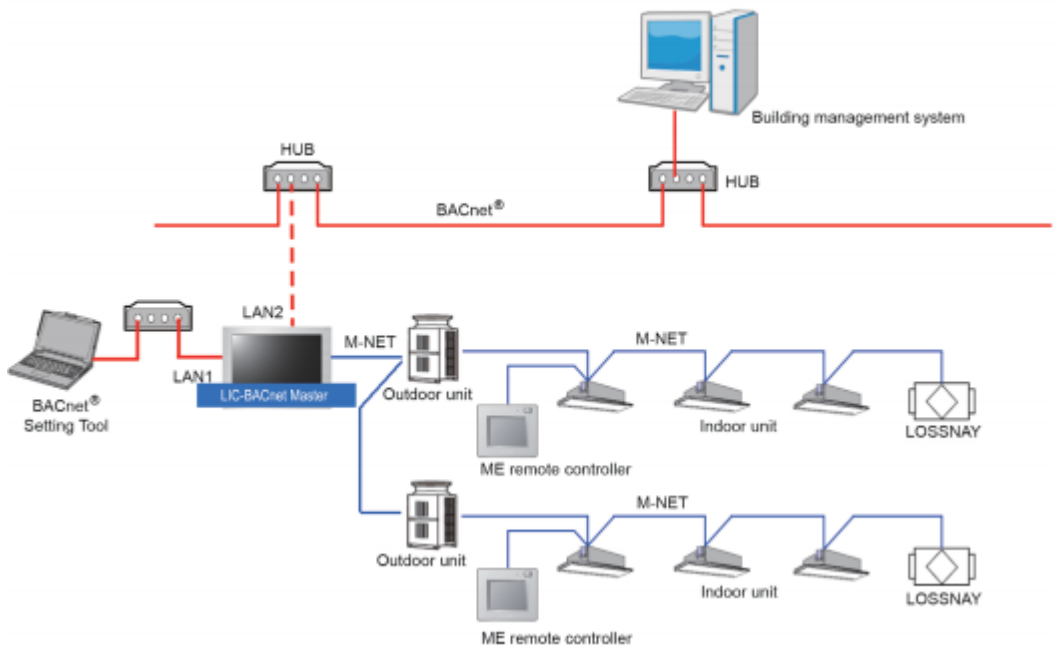

BACnet Point List

Object List
On Off Setup
On Off State, Number of ON/OFF, Cumulative operation time
Alarm Signal (4-digit error code)
Error Code
Operational Mode Setup
Operational Mode State
Fan Speed Setup
Fan Speed State
Room Temp [Water Temp]
Set Temp [Set Water Temp]
Set Temp Cool
Set Temp Heat

Set Temp Auto
Filter Sign [Circulating Water Exchange Sign]
Filter Sign Reset [Circulating Water Exchange Sign Reset]
Prohibition On Off
Prohibition Mode
Prohibition Filter Sign Reset [Prohibition Circulating Water Exchange Sign Reset]
Prohibition Set Temperature
M-NET Communication State
System Forced Off
Air Direction Setup
Air Direction State
Set High Limit Setback Temp
Set Low Limit Setback Temp
Ventilation Mode Setup
Ventilation Mode State
Air To Water Mode Setup
System Alarm Signal (4-digit error code)
PI Controller Alarm Signal (4-digit error code)
Group Apportioned Electric Energy
Interlocked Units Apportioned Electric Energy
PI controller Electric Energy 1–4
Pulse Input Electric Energy 1–4
Group Apportionment Parameter

Interlocked Units Apportionment Parameter
Night Purge State
Thermo On Off State
Trend Log Room Temp
Trend Log Group Apportioned Electric Energy
Trend Log Interlocked Units Apportioned Electric Energy
Trend Log PI controller Electric Energy 1–4
Trend Log Pulse Input Electric Energy 1–4
Trend Log Group Apportionment Parameter
Trend Log Interlocked Units Apportionment Parameter