Submittal

Project Name:

Norwich Cyberfusion Center

Contractor:

Engineer:

Architect:

Rep/Distributor:

Project Detail:

Customer:

Address:

City:

State:

Zip:

Submittal Date:

7/11/2024

Submitted By:

Name:	Mackenzie Sutter
Company:	Mitusbishi Electric Trane HVAC US
Email:	msutter@hvac.mea.com
Phone:	207-804-6249
Submittal Stage:	Submittal for Record

Table Of Contents

Notes.....3
Equipment Bill Of Material.....4
Written Specifications.....5
Equipment Schedules.....38
Design View Piping Diagrams.....41
AutoCAD Piping & Wiring Diagrams.....48
Submittal Documents.....49
Warranty Document.....142

Notes

Equipment Bill Of Material

Quantities

Qty	Model	Description	Tag
18	PAC-YT53CRAU-J	Simple MA controller	CTR1-FCU-113,CTR2-FCU-119,CTR3-FCU-121,CTR4-FCU-123,CTR5-FCU-125,CTR6-FCU-199B,CTR7-FCU-120,CTR8-FCU-114,CTR9-FCU-112B,CTR10-FCU-114B,CTR11-FCU-199A,CTR12-FCU-112,CTR1-FCU-110,CTR2-FCU-110A,CTR3-FCU-104,CTR4-FCU-103,CTR1-HP-101,CTR1-HP-116
1	PURY-HP192TSNU-A1	R410A R2 Series Outdoor Unit	ACCU-1
1	PURY-HP120TNU-A1	R410A R2 Series Outdoor Unit	ACCU-2
3	PUZ-HA24NHA1	R410A P Series Outdoor Unit	ACC-1,ACC-3,ACC-5
1	PUY-A18NKA7	R410A P Series Outdoor Unit	ACC-2
1	PUY-A24NHA7	R410A P Series Outdoor Unit	ACC-4
1	CMB-P1016NU-JA1	BC Controller Main	BS-1
1	CMB-P108NU-J1	BC Controller Single	BS-2
5	PLFY-P05NFMU-ER1.TH	Ceiling-Cassette (Four-Way) Indoor Unit	FCU-113,FCU-119,FCU-121,FCU-125,FCU-105
1	PLFY-P15NFMU-ER1.TH	Ceiling-Cassette (Four-Way) Indoor Unit	FCU-123
2	PLFY-P18NFMU-ER1.TH	Ceiling-Cassette (Four-Way) Indoor Unit	FCU-199B,FCU-199A
2	PLFY-P12NFMU-ER1.TH	Ceiling-Cassette (Four-Way) Indoor Unit	FCU-120,FCU-110A
2	PEFY-P54NMAU-E4	Ceiling-Concealed (Ducted) Indoor Unit	FCU-114,FCU-112
2	PLFY-P05NFMU-E	Ceiling-Cassette (Four-Way) Indoor Unit	FCU-112B,FCU-114B
1	PEFY-P30NMAU-E5	Ceiling-Concealed (Ducted) Indoor Unit	FCU-110
1	PEFY-P48NMAU-E4	Ceiling-Concealed (Ducted) Indoor Unit	FCU-104
1	PEFY-P24NMAU-E4	Ceiling-Concealed (Ducted) Indoor Unit	FCU-103
2	PLA-A24EA7R1.TH	Ceiling-Cassette (Four-Way) Indoor Unit	HP-101,HP-116
1	PKA-A18LA.TH	Wall -Mounted Indoor Unit	HP-109
2	PKA-A24KA7.TH	Wall -Mounted Indoor Unit	HP-117,HP-127
1	CMY-R200NCBK	Twinning Kit	TWK1
1	AE-200A	System Remote Controller	CTR1
1	BACNET Master	Software License	
2	PAC-PH02EHYU-E	Panel Heater	ACCU-1,ACCU-2
2	SGN-1	Side Snow/Hail Guard	
6	SGN-3	Front or Rear Snow/Hail Guard	
6	SHN-1	Snow Hood	
2	QSSB48M-24	Super Stand w/ 48in rails, 24in Tall	
1	QSSX48M-24	Super Stand Ext w/ 48in Rails, 24in Tall	
12	SLP-18FAU	Decoration Panel	FCU-113,FCU-119,FCU-121,FCU-123,FCU-125,FCU-199B,FCU-120,FCU-112B,FCU-114B,FCU-199A,FCU-110A,FCU-105
24	BV38BBSI	Ball Valve 3/8"	BS-1,BS-2
24	BV58BBSI	Ball Valve 5/8"	BS-1,BS-2
1	CMY-R302S-G1	Reducer	BS-1
4	PAC-USSEN002-FM-1	Flush Mount Sensor	FCU-105,HP-109,HP-117,HP-127
1	CMY-R301S-G	Reducer	BS-2
2	HG-A6	Hail Guards	ACC-1,ACC-3
4	PAC-SJ95MA-E	M-NET Converter	ACC-1,ACC-3,ACC-4,ACC-5
1	SRD-4	Snow Rain Diverter Kit	ACC-1
2	PLP-41EAEU	Grille with 3D i-see Sensor™	HP-101,HP-116
1	WB-PA4	Wind Baffle	
1	WB-SD4	LOW AMBIENT ACCESSORIES	
1	WB-RE4	LOW AMBIENT ACCESSORIES	
1	PAC-SJ96MA-E	M-NET Converter	ACC-2
4	QSMS2401M	Stand - 24" High	ACC-2,ACC-3,ACC-4,ACC-5
3	GOBI-II	Wall Mount Unit Condensate Pump	HP-109,HP-117,HP-127
1	WB-PA5	Front Wind Baffle	
1	WB-SD5	LOW AMBIENT ACCESSORIES	
1	WB-RE5	LOW AMBIENT ACCESSORIES	

Refrigerant Piping Materials

Pipe Size (inch)	Total Length (feet)	Number of Bends
3/4	49	10
7/8	49	10
1/4	975	55
1/2	975	55
3/8	795	39
5/8	795	39
1-1/8	90	12

Written Specifications

Table of Contents

Part 1 - General 2

1.01 SYSTEM DESCRIPTION R2-SERIES (HYPER-HEAT SIMULTANEOUS HEAT/COOL) 2

1.02 QUALITY ASSURANCE 3

1.03 DELIVERY, STORAGE AND HANDLING....4

Part 2 - Warranty....4

Part 3 - Outdoor Units....5

3.01 R2-SERIES HYPER HEAT SIMULTANEOUS HEATING/COOLING (HEAT RECOVERY), AIR-COOLED OUTDOOR UNITS 5

3.02 BRANCH CIRCUIT (BC) CONTROLLERS AS REQUIRED FOR SIMULTANEOUS HEAT/COOL SYSTEMS 11

Part 4 - Indoor Units....13

4.01 4-WAY CEILING-RECESSED CASSETTE WITH GRILLE FOR 2X2 GRID INDOOR UNIT....13

4.02 MEDIUM STATIC CEILING-CONCEALED DUCTED INDOOR UNIT 15

Part 5 - Controls 17

5.01 OVERVIEW....17

5.02 ELECTRICAL CHARACTERISTICS 18

5.03 CITY MULTI CONTROLS NETWORK....18

5.04 CMCN: REMOTE CONTROLLERS....19

5.05 CENTRALIZED CONTROLLER (WEB-ENABLED) 21

5.06 GRAPHICAL USER INTERFACE....30

5.07 ENERGY APPOINTMENT METHOD FOR CITY MULTI CENTRALIZED CONTROLLERS 33

5.08....37

5.09 CMCN: SYSTEM INTEGRATION 37

General

SYSTEM DESCRIPTION R2-SERIES (HYPER-HEAT SIMULTANEOUS HEAT/COOL)

Per the equipment schedule, the variable capacity, heat pump heat recovery air conditioning system basis of design is Mitsubishi Electric CITY MULTI VRF (Variable Refrigerant Flow) zoning system(s).

Acceptable alternative manufacturers, assuming compliance with these equipment specifications, are Daikin, Panasonic, and Hitachi. Contractor bidding an alternate manufacturer does so with full knowledge that that manufactures product may not be acceptable or approved and that contractor is responsible for all specified items and intents of this document without further compensation.

Simultaneous heating/cooling (heat recovery) systems shall consist of an outdoor unit, BC (Branch Circuit) Controller (or comparable branch devices), multiple indoor units, and an integral DDC (Direct Digital Controls) system. Each indoor unit or group of indoor units shall be capable of operating in any mode independently of other indoor units or groups. System shall be capable of changing mode (cooling to heating, heating to cooling) with no interruption to system operation.

Air-source VRF system shall be designed specifically for cold weather heating performance. Bidding “over-sized” systems (providing outdoor units with greater nominal tonnage than the basis of design) to meet system heat requirements is permissible on a voluntary alternate basis only and bid must be accompanied by equipment PLR curves and project energy analysis (completed with Trace 700 or EnergyPro) quantifying energy penalty resulting from associated cycling of over-sized system during mild ambient temperatures. To ensure owner comfort, each indoor unit or group of indoor units shall be independently controlled and capable of changing mode automatically when zone temperature strays 1.8 degrees F from set point for ten minutes.

No additional branch circuit controllers (or comparable branch devices) than shown on the drawings/schedule may be connected to any one outdoor unit. Contractors proposing alternate systems requiring more branch devices than those included as the basis of design are responsible for additional piping & electrical costs and are required to identify additional costs & installation time required of other trades with their bid.

QUALITY ASSURANCE

The units shall be listed by Electrical Testing Laboratories (ETL) and bear the ETL label.

All wiring shall be in accordance with the National Electrical Code (N.E.C.).

The units shall be manufactured in a facility registered to ISO 9001 and ISO14001 which is a set of standards applying to environmental protection set by the International Standard Organization (ISO).

All units must meet or exceed the 2010 Federal minimum efficiency requirements and the ASHRAE 90.1 efficiency requirements for VRF systems. Efficiency shall be published in accordance with the Air-Conditioning, Heating, and Refrigeration Institute (AHRI) Standard 1230.

System start-up supervision shall be a required service to be completed by the manufacturer or a duly authorized, competent representative that has been factory trained in system configuration and operation. The representative shall provide proof of manufacturer certification indicating successful completion within no more than two (2) years prior to system installation. This certification shall be included as part of the equipment and/or controls submittals.

DELIVERY, STORAGE AND HANDLING

Unit shall be stored and handled according to the manufacturer's recommendation.

Warranty

The CITY MULTI units shall be covered by the manufacturer's limited warranty for a period of one (1) year parts and seven (7) year compressor to the original owner from date of installation.

Installing contractor shall meet manufacturer requirements to obtain extended manufacturer's limited parts and compressor warranty for a period of ten (10) years to the original owner from date of installation. This warranty shall not include labor.

Manufacturer shall have a minimum of fifteen (15) years continuous experience providing VRF systems in the U.S. market.

All manufacturer technical and service manuals must be readily available for download by any local contractor should emergency service be required. Registering and sign-in requirements which may delay emergency service reference are not allowed.

The CITY MULTI VRF system shall be installed by a contractor with extensive CITY MULTI install and service training. The mandatory contractor service and install training should be performed by the manufacturer.

Outdoor Units

R2-SERIES HYPER HEAT SIMULTANEOUS HEATING/COOLING (HEAT RECOVERY), AIR-COOLED OUTDOOR UNITS

General:

The outdoor unit modules shall be air-cooled, direct expansion (DX), multi-zone units used specifically with VRF components described in this section and Part 5 (Controls). The outdoor unit modules shall be equipped with a single compressor which is inverter-driven and multiple circuit boards—all of which must be manufactured by the branded VRF manufacturer. Each outdoor unit module shall be completely factory assembled, piped and wired and run tested at the factory.

Outdoor unit systems may be comprised of multiple modules with differing capacity if a brand other than basis of design is proposed. All units requiring a factory supplied twinning kits shall be piped together in the field, without the need for equalizing line(s). If an alternate manufacturer is selected, any additional material, cost, and labor to install additional lines shall be incurred by the contractor. Contractor responsible for ensuring alternative brand compatibility in terms of availability, physical dimensions, weight, electrical requirements, etc.

Outdoor unit shall have a sound rating no higher than 65 dB(A) individually or 68 dB(A) twinned. Units shall have a sound rating no higher than 51 dB(A) individually or 54 dB(A) twinned while in night mode operation. Units shall have 5 levels sound adjustment via dip switch selectable fan speed settings. If an alternate manufacturer is selected, any additional material, cost, and labor to meet published sound levels shall be incurred by the contractor.

Refrigerant lines from the outdoor unit to the BC (Branch Circuit) Controller or comparable branch devices shall be insulated in accordance with the installation manual.

The outdoor unit shall have the capability of installing the main refrigerant piping through the bottom of the unit.

The outdoor unit shall have an accumulator with refrigerant level sensors and controls. Units shall actively control liquid level in the accumulator via Linear Expansion Valves (LEV) from the heat exchanger.

The outdoor unit shall have a high pressure safety switch, over-current protection, crankcase heater and DC bus protection.

VRF system shall meet performance requirements per schedule and be within piping limitations & acceptable ambient temperature ranges as described in respective manufacturers' published product catalogs. Non-published product capabilities or performance data are not acceptable.

The outdoor unit shall be capable of continuous operation in heating mode down to -31°F ambient temperatures, simultaneous heating/cooling mode from -4-70°F ambient temperatures, and cooling mode up to 126°F without additional restrictions on line length & vertical separation beyond those published in respective product catalogs. Models with capacity data for required temperature range published as "for reference only" are not considered capable of continuous operation at those conditions and are not acceptable. If an alternate manufacturer is selected, any additional material, cost, and labor to meet ambient operating range and performance shall be incurred by the contractor.

The outdoor unit shall have a high efficiency oil separator plus additional logic controls to ensure adequate oil volume in the compressor is maintained. Oil return sequences must be enabled only during extended periods of reduced refrigerant flow to ensure no disruption to correct refrigerant flow to individual zones during peak loads. Systems which might engage oil return sequence based on hours of operation risk oil return during inopportune periods are not allowed. Systems which rely on sensors (which may fail) to engage oil return sequence are not allowed.

Unit must defrost all circuits simultaneously in order to resume full heating more quickly during extreme low ambient temperatures (below 23F). Partial defrost, also known as hot gas defrost which allows reduced heating output during defrost, is permissible only when ambient temperature is above 23F.

While in hot gas defrost the system shall slow the indoor unit fan speed down to maintain a high discharge air temperature, systems that keep fan running in same state shall not be allowed as they provide an uncomfortable draft to the indoor zone due to lower discharge air temperatures

In reverse defrost all refrigerant shall be bypassed in the main branch controller and shall not be sent out to the indoor units, systems that flow refrigerant through indoor units during reverse defrost shall not be allowed.

The outdoor unit shall be provided with a manufacturer supplied 20 gauge hot dipped galvanized snow /hail guard. The snow/hail guard protects the outdoor coil surfaces from hail damage and snow build-up in severe climates.

VRF four-legged outdoor unit mounting systems shall be provided by manufacturer. Stand shall be made from 7 gauge plate steel with thermally fused polyester powder coat finish that meets ASTM D3451-06 standards. Stands shall be provided with galvanized mounting hardware and meets all ASCE 7 overturning safety requirement.

Unit Cabinet:

The casing(s) shall be fabricated of galvanized steel, bonderized and finished.

Outdoor unit components shall be coated with the Seacoast Protection Coating (Brine Spray – BS coating) to protect components from premature corrosion due to a seacoast environment. Coating shall be applied to components before original outdoor unit assembly to ensure manufacturer quality standards are not compromised and shall meet the following minimum requirements:

≥85µm thermoset polyester-resin powder coating on External Front Panel

≥70µm thermoset polyester-resin powder coating on External Panel Base, Pillar, Compressor Cover, Fan Motor Support, Electrical Box

≥1µm cellulose and polyurethane-resin coating on heat exchanger fins

≥10µm polyurethane coating on printed circuit boards

The outdoor unit shall be tested in compliance with ISO9277 such that no unusual rust shall develop after 960 hours of salt spray testing.

Panels on the outdoor unit shall be scratch free at system startup. If a scratch occurs the salt spray protection is compromised and the panel should be replaced immediately.

Fan:

Each outdoor unit module shall be furnished with direct drive, variable speed propeller type fan(s) only. Fans shall be factory set for operation at 0 in. wg external static pressure, but capable of normal operation with a maximum of 0.32 in. WG external static pressure via dipswitch.

All fan motors shall have inherent protection, have permanently lubricated bearings, and be completely variable speed.

All fans shall be provided with a raised guard to prevent contact with moving parts.

Refrigerant and Refrigerant Piping:

R410A refrigerant shall be required for systems.

Polyolester (POE) oil—widely available and used in conventional domestic systems—shall be required. Prior to bidding, manufacturers using alternate oil types shall submit material safety data sheets (MSDS) and comparison of hygroscopic properties for alternate oil with list of local suppliers stocking alternate oil for approval at least two weeks prior to bidding.

Refrigerant piping shall be phosphorus deoxidized copper (copper and copper alloy seamless pipes) of sufficient radial thickness as defined by the VRF equipment manufacturer and installed in accordance with manufacturer recommendations.

All refrigerant piping must be insulated with ½" closed cell, CFC-free foam insulation with flame-Spread Index of less than 25 and a smoke-development Index of less than 50 as tested by ASTM E 84 and CAN / ULC S-102. R value of insulation must be at least 3.

Refrigerant line sizing shall be in accordance with manufacturer specifications. Future changes to indoor unit styles or sizes must be possible without resizing/replacing refrigerant piping to any other branch devices or indoor units.

Coil:

Outdoor Coil shall be constructed to provide equal airflow to all coil face surface are by means of a 4-sided coil.

Outdoor Coil shall be elevated at least 12" from the base on the unit to protect coil from freezing and snow build up in cold climates. Manufacturer's in which their coil extends to within a few inches from the bottom of their cabinet frame shall provide an additional 12" of height to their stand or support structure to provide equal protection from elements as Mitsubishi Electric basis of design. Any additional support costs, equipment fencing, and tie downs required to meet this additional height shall be responsibility of Mechanical Contractor to provide.

The outdoor coil shall be of nonferrous construction with lanced or corrugated plate fins on copper tubing.

The coil fins shall have a factory applied corrosion resistant blue-fin finish. Uncoated aluminum coils/fins are not allowed.

The coil shall be protected with an integral metal guard.

Refrigerant flow from the outdoor unit shall be controlled by means of an inverter driven compressor.

Unit shall have prewired plugs for optional panel heaters in order to prevent any residual ice buildup from defrost. Panel heaters are recommended for operating environments where the ambient temperature is expected to stay below -1F for 72 hours.

Condenser coil shall have active hot gas circuit direct from compressor discharge on lowest coil face area to shed defrost condensate away from coil and protect from Ice formation after returning to standard heat pump operation. While in Heat Pump operation this lower section of the Outdoor Evaporator coil shall continually run hot gas from the compressor discharge to protect the coil from ice buildup and coil rupture. Manufacturers who do not have an active hot gas circuit in the lower section of the Outdoor coil to protect coil from freezing shall not be allowed to bid on project in markets where the outdoor unit will see temperatures below freezing.

Compressor:

Each outdoor unit module shall be equipped with only inverter driven scroll hermetic compressors. Non inverter-driven compressors, which may cause inrush current (demand charges) and require larger generators for temporary power shall not be allowed.

Each compressor shall be equipped with a multi-port discharge mechanism to eliminate over compression at part load. Manufacturer's that rely on a single compressor discharge port and provide no means of eliminating over compression and energy waste at part load shall not be allowed.

Compressor (or compressor circuit) must utilize hot gas injection circuit or two-stage compression to allow compression ratio (thus heating output) to increase during extreme cold ambient temperatures.

Crankcase heat shall be provided via induction-type heater utilizing eddy currents from motor windings. Energy-wasting "belly-band" type crankcase heaters are not allowed. Manufacturers that utilize belly-band crankcase heaters will be considered as alternate only.

All compressors shall have an inverter to modulate capacity. The capacity for each module/system shall be variable with a minimum turndown not greater than 15% of the scheduled nominal capacity.

The compressor shall be equipped with an internal thermal overload.

Field-installed oil equalization lines between modules are not allowed. Prior to bidding, manufacturers requiring equalization must submit oil line sizing calculations specific to each system and module placement for this project.

Manufacturers that utilize a compressor sump oil sensor to equalize compressor oil volume within a single module shall not be allowed unless they actively shut down the system to protect from compressor failure.

Panel Heater:

Each outdoor unit module shall be equipped with a panel heater to protect coil against ice build-up during prolonged winter operation. Panel heater shall activate only if compressor is operating in heating mode at an outdoor ambient temperature of 39F or below

Controls:

The unit shall be an integral part of the system & control network described in Part 5 (Controls) and react to heating/cooling demand as communicated from connected indoor units over the control circuit. Required field-installed control voltage transformers and/or signal boosters shall be provided by the manufacturer.

Each outdoor unit module shall have the capability of 4 levels of demand control based on external input.

Electrical:

The outdoor unit electrical power shall be 208/230 volts, 3-phase, 60 hertz or 460 volts, 3-phase, 60 hertz per equipment schedule.

The outdoor unit shall be controlled by integral microprocessors.

The control circuit between the indoor units, BC Controller and the outdoor unit shall be 24VDC completed using a 2-conductor, twisted pair shielded cable to provide total integration of the system.

BRANCH CIRCUIT (BC) CONTROLLERS AS REQUIRED FOR SIMULTANEOUS HEAT/COOL SYSTEMS

General

BC (Branch Circuit) Controllers (or comparable branch devices) shall include multiple branches to allow simultaneous heating and cooling by allowing either hot gas refrigerant to flow to indoor unit(s) for heating or subcooled liquid refrigerant to flow to indoor unit(s) for cooling. Refrigerant used for cooling must always be subcooled for optimal indoor unit LEV performance; alternate branch devices which do not include controlled refrigerant subcooling risk bubbles in liquid supplied to indoor unit LEVs and are not allowed.

BC Controllers (or comparable branch devices) shall be equipped with a circuit board that interfaces to the controls system and shall perform all functions necessary for operation. The unit shall have a galvanized steel finish and be completely factory assembled, piped and wired. Each unit shall be run tested at the factory. This unit shall be mounted indoors, with access and service clearance provided for each controller. BC Controllers (or comparable branch devices) shall be suitable for use in plenums in accordance with UL1995 ed 4.

BC Unit Cabinet:

The casing shall be fabricated of galvanized steel.

Each cabinet shall house a liquid-gas separator and multiple refrigeration control valves.

The unit shall house two tube-in-tube heat exchangers.

Refrigerant Piping (specifications in addition to those for outdoor unit):

All refrigerant pipe connections shall be brazed.

Future changes to indoor unit quantities or sizes served by BC Controller or comparable branch device must be possible with no piping changes except between the branch device and indoor unit(s) changing. Systems which might require future piping changes between branch device and outdoor unit—if changes to indoor unit quantities or sizes are made—are not considered equal and are not allowed.

Refrigerant valves:

Service shut-off valves shall be field-provided/installed for each branch to allow service to any indoor unit without field interruption to overall system operation.

Condensate Management:

BC Controller (or comparable branch device) must have integral resin drain pan or insulate refrigeration components with removable insulation that allows easy access for future service needs. Cabinets filled with solid foam insulation do not allow for future service and are not allowed.

Electrical:

The unit electrical power shall be 208/230 volts, 1 phase, 60 Hertz. The unit shall be capable of satisfactory operation within voltage limits of 187-228 (208V/60Hz) or 207-253 (230/60Hz).

The BC Controller shall be controlled by integral microprocessors

The control circuit between the indoor units and outdoor units shall be 24VDC completed using a 2-conductor, twisted pair shielded cable to provide total.

Indoor Units

4-WAY CEILING-RECESSED CASSETTE WITH GRILLE FOR 2X2 GRID INDOOR UNIT

General:

The indoor unit shall be a four-way cassette style indoor unit that recesses into the ceiling with a ceiling grille. The indoor unit shall be factory assembled, wired and run tested. Contained within the unit shall be all factory wiring, piping, electronic modulating linear expansion device, control circuit board and fan motor. The unit shall have a self-diagnostic function, 3-minute time delay mechanism, an auto restart function, an emergency operation function and a test run switch. Indoor unit and refrigerant pipes shall be charged with dehydrated air before shipment from the factory. The unit shall be suitable for use in plenums in accordance with UL1995 ed 4.

Unit Cabinet:

The cabinet shall be a compact 22-7/16" wide x 22-7/16" deep so it will fit within a standard 24" square suspended ceiling grid.

The cabinet panel shall have provisions for a field installed filtered outside air intake.

Four-way grille shall be fixed to bottom of cabinet allowing two, three or four-way blow.

Fan:

The indoor fan shall be an assembly with a turbo fan direct driven by a single motor.

The indoor fan shall be statically and dynamically balanced to run on a motor with permanently lubricated bearings.

The indoor fan shall be capable of three (3) speed settings, Low, Mid, and High.

The indoor unit shall have an adjustable air outlet system offering 4-way airflow, 3-way airflow, or 2-way airflow.

The indoor unit vanes shall have 5 fixed positions and a swing feature that shall be capable of automatically swinging the vanes up and down for uniform air distribution.

Grille shall include an optional "3D i-see" sensor, or equal, to work in conjunction with indoor unit control sequence to prevent unnecessary cooling or heating in unoccupied areas of the zone without decreasing comfort levels. Sensor must detect occupancy (not simply motion) and location of occupants by measuring size & temperature of objects within a 39' detecting diameter (based on 8.8ft mounting height) with 1,856 or more measuring points.

Filter:

Return air shall be filtered by means of a long-life washable filter.

Coil:

The indoor coil shall be of nonferrous construction with smooth plate fins on copper tubing. The tubing shall have inner grooves for high efficiency heat exchange. All tube joints shall be brazed with phos-copper or silver alloy.

The coils shall be pressure tested at the factory.

The unit shall be provided with an integral condensate lift mechanism that will be able to raise drain water 19-3/4" inches above the condensate pan.

Electrical:

The unit electrical power shall be 208/230 volts, 1-phase, 60 hertz.

The system shall be capable of satisfactory operation within voltage limits of 187-228 volts (208V/60Hz) or 207-253 volts (230V/60Hz).

Controls:

Indoor unit shall compensate for the higher temperature sensed by the return air sensor compared to the temperature at level of the occupant when in HEAT mode. Disabling of compensation shall be possible for individual units to accommodate instances when compensation is not required.

Control board shall include contacts for control of external heat source. External heat may be energized as second stage with 1.8°F – 9.0°F adjustable deadband from set point.

Indoor unit shall include no less than four (4) digital inputs capable of being used for customizable control strategies.

Indoor unit shall include no less than three (3) digital outputs capable of being used for customizable control strategies.

A factory-installed drain pan sensor shall provide protection against drain pan overflow by sensing a high condensate level in the drain pan. Should this occur, the control shuts down the indoor unit before an overflow can occur. A thermistor error code will be produced should the sensor activate indicating a fault which must be resolved before the unit re-starts.

MEDIUM STATIC CEILING-CONCEALED DUCTED INDOOR UNIT

General:

The ceiling-concealed ducted indoor unit shall be factory assembled, wired and run tested. Contained within the unit shall be all factory wiring, piping, electronic modulating linear expansion device, control circuit board and fan motor. The unit shall have a self-diagnostic function, 3-minute time delay mechanism, and an auto restart function. Indoor unit and refrigerant pipes shall be charged with dehydrated air before shipment from the factory. The unit shall be suitable for use in plenums in accordance with UL1995 ed 4.

Unit Cabinet:

The unit shall be ceiling-concealed, ducted—with a 2-position, field adjustable return and a fixed horizontal discharge supply.

The cabinet panel shall have provisions for a field installed filtered outside air intake.

Fan:

Indoor unit shall feature multiple external static pressure settings ranging from 0.14 to 0.60 in. WG.

The indoor unit fan shall be an assembly with statically and dynamically balanced Sirocco fan(s) direct driven by a single motor with permanently lubricated bearings.

The indoor fan shall consist of three (3) speeds, High, Mid, and Low plus the Auto-Fan function

Filter:

Return air shall be filtered by means of a standard factory installed return air filter.

Optional return filter box (rear or bottom placement) with high-efficiency filter as noted on equipment schedule.

Coil:

The indoor coil shall be of nonferrous construction with smooth plate fins on copper tubing. The tubing shall have inner grooves for high efficiency heat exchange. All tube joints shall be brazed with phos-copper or silver alloy.

The coils shall be pressure tested at the factory.

Coil shall be provided with a sloped drain pan. Units without sloped drain pans which must be installed cockeyed to ensure proper drainage are not allowed.

The unit shall be provided with an integral condensate lift mechanism able to raise drain water 27 inches above the condensate pan.

Electrical:

The unit electrical power shall be 208/230 volts, 1-phase, 60 hertz.

The system shall be capable of satisfactory operation within voltage limits of 187-228 volts (208V/60Hz) or 207-253 volts (230V/60Hz).

Controls:

Indoor unit shall compensate for the higher temperature sensed by the return air sensor compared to the temperature at level of the occupant when in HEAT mode. Disabling of compensation shall be possible for individual units to accommodate instances when compensation is not required.

Control board shall include contacts for control of external heat source. External heat may be energized as second stage with 1.8°F – 9.0°F adjustable deadband from set point.

Indoor unit shall include no less than four (4) digital inputs capable of being used for customizable control strategies.

Indoor unit shall include no less than three (3) digital outputs capable of being used for customizable control strategies.

Control board shall include contacts for control of no less than two stages of external heat. The first stage of external heat may be energized when the space temperature is 2.7°F from set point for between 10-25 minutes (user adjustable). The second stage of external heat may be energized when the first stage has been active for no less than 5 minutes and the space temperature has not risen by more than 0.9°F.

Indoor unit shall include no less than four (4) digital inputs capable of being used for customizable control strategies.

Indoor unit shall include no less than three (3) digital outputs capable of being used for customizable control strategies.

Controls

OVERVIEW

The control system shall consist of a low voltage communication network and a web-based interface. The controls system shall gather data and generate web pages accessible through a conventional web browser on each PC connected to the network. Operators shall be able to perform all normal operator functions through the web browser interface.

Furnish energy conservation features such as optimal start, request-based logic, and demand level adjustment of overall system capacity as specified in the sequence.

System shall be capable of email generation for remote alarm annunciation.

ELECTRICAL CHARACTERISTICS

General:

Controller power and communications shall be via a common non-polar communications bus and shall operate at 30VDC.

Wiring:

Control wiring shall be installed in a daisy chain configuration from indoor unit to indoor unit, to the BC controller (main and subs, if applicable) and to the outdoor unit. Control wiring to remote controllers shall be run from the indoor unit terminal block to the controller associated with that unit.

Control wiring for centralized controllers shall be installed in a daisy chain configuration from outdoor unit to outdoor unit, to the system controllers (centralized controllers and/or integrated web based interface), to the power supply.

Wiring type:

Wiring shall be 2-conductor (16 AWG), twisted, stranded, shielded wire as defined by the Diamond System Builder output.

Network wiring shall be CAT-5 with RJ-45 connection.

CITY MULTI CONTROLS NETWORK

The CITY MULTI Controls Network (CMCN) consists of remote controllers, centralized controllers, and/or integrated web based interface communicating over a high-speed communication bus. The CITY MULTI Controls Network shall support operation monitoring, scheduling, occupancy, error email distribution, personal web browsers, tenant billing, online maintenance support, and integration with Building Management Systems (BMS) using either LonWorks® or BACnet® interfaces. The below figure illustrates a sample CMCN System Configuration.

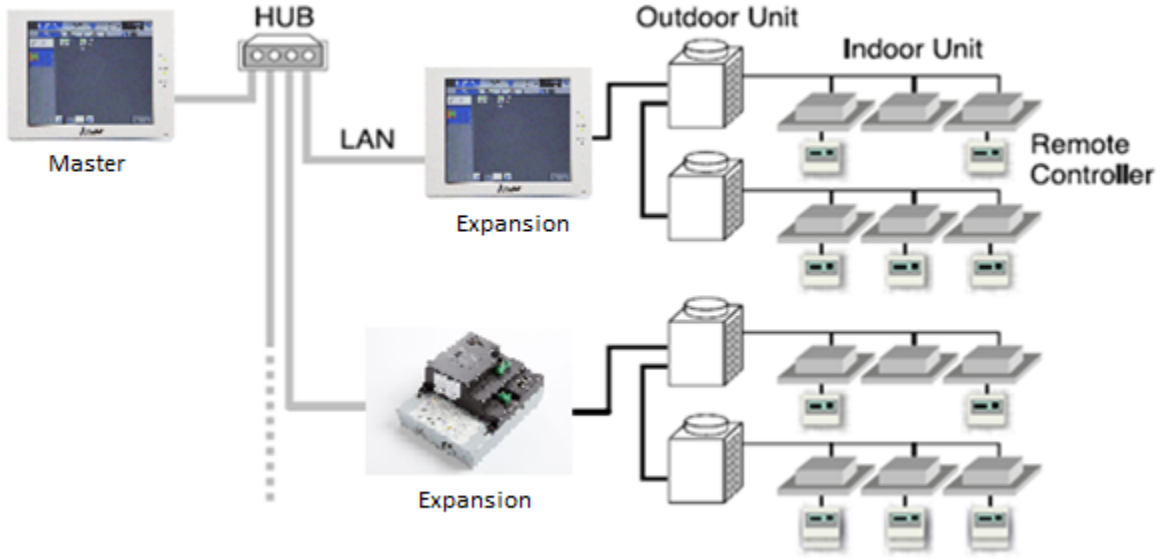

CMCN System Configuration

CMCN: REMOTE CONTROLLERS

Simple MA Remote Controller:

The Backlit Simple MA Remote Controller shall be capable of controlling up to 16 indoor units (defined as 1 group).

The Backlit Simple MA Remote Controller shall only be used in same group with Wireless MA Remote Controllers or with other Backlit Simple MA Remote Controllers, with up to two remote controllers per group.

Simple MA Remote Controller			
Item	**Description**	**Operation**	**Display**
ON/OFF	Run and stop operation for a single group	Each Group	Each Group
Operation Mode	Switches between Cool/Drying/Auto/Fan/Heat/Setback. Operation modes vary depending on the air conditioner unit. Auto and Setback mode are available for the R2/WR2-Series only.	Each Group	Each Group
Temperature Setting	Sets the temperature from 40°F – 95°F depending on operation mode and indoor unit. Separate COOL and HEAT mode set points available depending on central controller and connected mechanical equipment.	Each Group	Each Group
Fan Speed Setting	Available fan speed settings depending on indoor unit.	Each Group	Each Group
Air Flow Direction Setting	Air flow direction settings vary depending on the indoor unit model.	Each Group	Each Group
Permit / Prohibit Local Operation	Individually prohibit operation of each local remote control function (Start/Stop, Change operation mode, Set temperature, Reset filter). *1: Centrally Controlled is displayed on the remote controller for prohibited functions.	N/A	Each Group *1
Display Indoor Unit Intake Temp	Measures and displays the intake temperature of the indoor unit when the indoor unit is operating.	N/A	Each Group
Display Backlight	Pressing the button lights up a backlight. The light automatically turns off after a certain period of time. (The brightness settings can be selected from Bright, Dark, and Light off.)	N/A	Each Unit
Error	When an error is currently occurring on an air conditioner unit, the afflicted unit and the error code are displayed	N/A	Each Unit
Test Run	Operates air conditioner units in test run mode. *2 The display for test run mode will be the same as	Each Group	Each Group *2

	for normal start/stop (does not display “test run”).		
Ventilation Equipment	Up to 16 indoor units can be connected to an interlocked system that has one LOSSNAY unit.	Each Group	N/A
Set Temperature Range Limit	Set temperature range limit for cooling, heating, or auto mode.	Each Group	Each Group

CENTRALIZED CONTROLLER (WEB-ENABLED)

Master Centralized Controller:

The Master Centralized Controller shall be capable of controlling a maximum of two hundred (200) indoor units across multiple CITY MULTI outdoor units with the use of three expansion controllers. The Master Centralized Controller shall be approximately 11-5/32” x 7-55/64” x 2-17/32” in size and shall be powered with an integrated 100-240 VAC power supply. The Master Centralized Controller shall support system configuration, daily/weekly scheduling, monitoring of operation status, night setback settings, free contact interlock configuration and malfunction monitoring. When being used alone without the expansion controllers, the Master Centralized Controller shall have five basic operation controls which can be applied to an individual indoor unit, a collection of indoor units (up to 50 indoor units), or all indoor units (collective batch operation). This basic set of operation controls for the Master Centralized Controller shall include on/off, operation mode selection (cool, heat, auto (R2/WR2-Series only), dry, setback (R2/WR2-Series only) and fan), temperature setting, fan speed setting, and airflow direction setting. Since the master provides centralized control it shall be able to enable or disable operation of local remote controllers. In terms of scheduling, the Master Centralized Controller shall allow the user to define both daily and weekly schedules (up to 24 scheduled events per day) with operations consisting of ON/OFF, mode selection, temperature setting, air flow (vane) direction, fan speed, and permit/prohibit of remote controllers.

Master Centralized Controller			
Item	**Description**	**Operation**	**Display**
ON/OFF	Run and stop operation.	Each Block, Group or Collective	Each Group or Collective

Operation Mode	Switches between Cool/Dry/Auto/Fan/Heat. (Group of Lossnay unit: automatic ventilation/vent-heat/interchange/normal ventilation) Operation modes vary depending on the air conditioner unit. Auto mode is available for the R2/WR2-Series only.	Each Block, Group or Collective	Each Group
Temperature Setting	Sets the temperature from 57°F – 87°F depending on operation mode and indoor unit.	Each Block, Group or Collective	Each Group
Fan Speed Setting	Available fan speed settings depending on indoor unit.	Each Block, Group or Collective	Each Group
Air Flow Direction Setting	Air flow direction settings vary depending on the indoor unit model. *1. Louver cannot be set.	*1 Each Block, Group or Collective	Each Group
Schedule Operation	Annual/weekly/today schedule can be set for each group of air conditioning units. Optimized start setting is also available. *1. The system follows either the current day, annual schedule, or weekly, which are in the descending order of overriding priority. Twenty-four events can scheduled per day, including ON/OFF, Mode, Temperature Setting, Air Direction, Fan Speed and Operation Prohibition. Five types of weekly schedule (seasonal) can be set. Settable items depend on the functions that a given air conditioning unit supports.	*2 Each Block, Group or Collective	Each Group
Optimized Start	Unit starts 5 - 60 minutes before the scheduled time based on the operation data history in order to reach the scheduled temperature at the scheduled time.	Each Block, Group or Collective	Each Block, Group or Collective
Night Setback Setting	The function helps keep the indoor temperature in the temperature range while the units are stopped and during the time this function is effective.	Each Group	Each Group

Permit / Prohibit Local Operation	Individually prohibit operation of each local remote control function (Start/Stop, Change operation mode, Set temperature, Reset filter). *3. Centrally Controlled is displayed on the remote controller for prohibited functions.	Each Block, Group or Collective	*3 Each Group
Room Temp	Displays the room temperature of the group. Space temperature displayed on the indoor unit icon on the touch screen interface.	N/A	Each Group
Error	When an error is currently occurring on an air conditioner unit, the afflicted unit and the error code are displayed *4. When an error occurs, the LED flashes. The operation monitor screen shows the abnormal unit by flashing it. The error monitor screen shows the abnormal unit address, error code and source of detection. The error log monitor screen shows the time and date, the abnormal unit address, error code and source of detection	N/A	*4 Each Unit or Collective
Outdoor Unit Status	Compressor capacity percentage and system pressure (high and low) pressure (excludes S-Series)	Each ODU	Each ODU
Connected Unit Information	MNET addresses of all connected systems	Each IDU, ODU and BC	Each IDU, ODU and BC
Ventilation Equipment	This interlocked system settings can be performed by the master system controller. When setting the interlocked system, use the ventilation switch the free plan LOSSNAY settings between “Hi”, “Low” and “Stop”. When setting a group of only free plan LOSSNAY units, you can switch between “Normal ventilation”, “Interchange ventilation” and “Automatic ventilation”.	Each Group	Each Group
Multiple Language	Other than English, the following languages can be selected: Spanish, French, Japanese, Dutch, Italian, Russian, Chinese, and Portuguese.	N/A	Collective

External Input / Output	By using accessory cables you can set and monitor the following. Input By level: “Batch start/stop”, “Batch emergency stop” By pulse: “batch start/stop”, “Enable/disable remote controller” Output: “start/stop”, “error/Normal” *5. Requires the external I/O cables (PAC-YG10HA-E) sold separately.	*5 Collective	*5 Collective

All Master Centralized Controllers shall be equipped with two RJ-45 Ethernet ports to support interconnection with a network PC via a closed/direct Local Area Network (LAN) or to a network switch for IP communication to up to three expansion controllers for display of up to two hundred (200) indoor units on the main master centralized controller interface.

The Master Centralized Controller shall be capable of performing initial settings via the high-resolution, backlit, color touch panel on the controller or via a PC browser using the initial settings.

Standard software functions shall be available so that the building manager can securely log into each master centralized controller via the PC's web browser to support operation monitoring, scheduling, error email, interlocking and online maintenance diagnostics. Additional optional software functions of personal browser for PCs and MACs and Energy shall be available but are not included. The Energy Apportionment function shall require a LIC-Charge software license

Expansion Controller:

The Expansion Controller shall serve as a standalone centralized controller or as an expansion module to the Master Centralized Controller for the purpose of adding up to 50 indoor units to either the main touch screen interface of the master centralized controller. Up to three (3) expansion controllers can be connected to the master via a local IP network (and their IP addresses assigned on the master) to the master to allow for up to two hundred (200) indoor units to be monitored and controlled from the master interface.

The expansion controllers have all of the same capabilities to monitor and control their associated indoor units as the features specified above. Even when connected to the master and configured to display their units on the main controller, the individual indoor units connected to the expansion can still be monitored and controlled from the interface of the expansion. The last command entered will take precedence, whether at the wall controller, the expansion or the master Centralized Controller.

Non Touch Screen, Networked Centralized Controller:

The Non Touch Screen, Networked Centralized Controller shall be capable of controlling a maximum of 50 indoor units across multiple CITY MULTI outdoor units. The controller shall be approximately 8-1/2"x10" in size and shall be powered by its internal power supply. The controller shall support system configuration, daily/weekly scheduling, monitoring of operation status, free contact interlock configuration and malfunction monitoring. The controller shall have five basic operation controls which can be applied to an individual indoor unit, a group of indoor units (up to 50 indoor units), or all indoor units (collective batch operation). This basic set of operation controls for the controller shall include on/off, operation mode selection (cool, heat, auto (R2/WR2-Series only), dry, temperature setting, fan speed setting, and airflow direction setting. Since the controller provides centralized control it shall be able to enable or disable operation of local remote controllers. In terms of scheduling, the controller shall allow the user to define both daily and weekly schedules with operations consisting of ON/OFF, mode selection, temperature setting, air flow (vane) direction, fan speed, and permit/prohibit of remote controllers.

Non Touch Screen, Networked Centralized Controller			
Item	**Description**	**Operation**	**Display**
ON/OFF	Run and stop operation.	Each Block, Group or Collective	Each Group or Collective
Operation Mode	Indoor unit modes: COOL/DRY/FAN/AUTO/HEAT. Lossnay unit modes: HEAT RECOVERY/BYPASS/AUTO Air to water (PWFY) modes: HEATING/HEATING ECO/HOT WATER/ANTI-FREEZE/COOLING *Operation modes vary depending on the unit model connected. ** Auto mode is available for the R2/WR2-Series only.	Each Block, Group or Collective	Each Group
Temperature Setting	Sets the temperature from 40°F – 95°F depending on operation mode and indoor unit model. Separate COOL and HEAT mode set points available depending on remote controller and connected mechanical equipment.	Each Block, Group or Collective	Each Group
Set Temperature Range Limit	The range of room temperature setting can be limited by the initial setting depending on the indoor unit connected.	Each Group	Each Group
Fan Speed Setting	Available fan speed settings depend on indoor unit model.	Each Block, Group or Collective	Each Group
Air Flow Direction Setting	*Air flow direction settings vary depending on the indoor unit model. *1. Louver cannot be set.	*1 Each Block, Group or Collective	Each Group

Schedule Operation	Annual/weekly/today schedule can be set for each group of air conditioning units. Optimized start setting is also available. *2. The system follows either the current day, annual schedule, or weekly, which are in the descending order of overriding priority. Twenty-four events can scheduled per day, including ON/OFF, Mode, Temperature Setting, Air Direction, Fan Speed and Operation Prohibition. Five types of weekly schedule (seasonal) can be set. Settable items depend on the functions that a given air conditioning unit supports.	*2 Each Block, Group or Collective	Each Group
Hold	Disables scheduled functions for indoor unit groups and their associated remote controller timers. *not available for general equipment	Each Block, Group or Collective	Each Group
Optimized Start	Unit starts 5 - 60 minutes before the scheduled time based on the operation data history in order to reach the scheduled temperature at the scheduled time.	Each Block, Group or Collective	Each Block, Group or Collective
Permit / Prohibit Local Operation	Individually prohibit operation of each local remote control function (Start/Stop, Change operation mode, Set temperature, Fan Speed, Air Direction and Reset filter). *3. Centrally Controlled is displayed on the remote controller for prohibited functions.	Each Block, Group or Collective	*3 Each Group
Room Temp	Displays the room temperature of the group.	N/A	Each Group
Room Humidity	Displays the percent relative humidity in the space as sensed by the Smart ME Remote Controller	N/A	Each Group
Occupancy Sensor	Displays the occupancy icon on the group icon in the condition list page when the room is occupied (blue) or vacant (gray). *The Smart ME Remote Controller Occupancy sensor is required.	N/A	Each Group
Brightness Sensor	Displays the brightness icon on the group icon in the condition list when the space is determined to be bright (yellow) or dark (gray). *The Smart ME Remote Controller Brightness sensor is required.	N/A	Each Group

Error	When an error is currently occurring on an air conditioner unit, the afflicted unit and the error code are displayed *4. When an error occurs, the LED flashes. The operation monitor screen shows the abnormal unit by flashing it. The error monitor screen shows the abnormal unit address, error code and source of detection. The error log monitor screen shows the time and date, the abnormal unit address, error code and source of detection	N/A	*4 Each Unit or Collective
Ventilation Equipment	This interlocked system settings can be performed by the master system controller. When setting the interlocked system, use the ventilation switch the free plan LOSSNAY settings between “Hi”, “Low” and “Stop”. When setting a group of only free plan LOSSNAY units, you can switch between “Normal ventilation”, “Interchange ventilation” and “Automatic ventilation”.	Each Group	Each Group
Multiple Language	Other than English, the following languages can be selected: Spanish, French, Japanese, German, Italian, Russian, Chinese, and Portuguese.	N/A	N/A
External Input / Output	By using accessory cables you can set and monitor the following. Input: By level: “Batch start/stop”, “Batch emergency stop”; By pulse: “batch start/stop”, “Enable/disable remote controller” Output: “start/stop”, “error/Normal” *5. Requires the external I/O cables (PAC-YG10HA-E) sold separately.	*5 Collective	*5 Collective
M-Net	The "M-NET" LED lights, when AC power supply is turned ON. The LED blinks while M-NET is communicating.	N/A	Each Group (LED)
Collective ON/OFF	All the units can be operated / stopped with a DIP switch.	Collective	N/A
Measurement	Displays the Temperature and Humidity inputs of the AI Board. Supports graph display and data export.	N/A	Each Unit
AHC Status	Displays the status of the of the inputs and outputs of each Advanced HVAC Controller (DC-A2IO)	N/A	Each Unit
Free Contact Status	Displays the input/output status of the Free Contacts on the indoor units	N/A	Each Unit

Free Contact Interlock Control	Operation of indoor groups, general equipment or free contact outputs based on group(s) conditions or free contact(s) input states.	Each Group, Output or Collective	N/A
Data Back-up (PC)	Initial setting data can be exported to a PC.	Collective	N/A

All Non Touch Screen, Networked Centralized Controller shall be equipped with two RJ-45 Ethernet port to support interconnection with a network PC and BACnet/IP communication via a closed/direct Local Area Network (LAN). The controller shall be capable of performing initial settings online via a PC using the controller's initial setting browser or online/offline with the Initial Setting Tool.

Standard software functions shall be available so that the building manager can securely log into each controller via the PC's web browser to support operation monitoring, scheduling, error email, interlocking and online maintenance diagnostics. Standard software functions shall not expire. Additional optional software functions of personal browser for PCs and MACs and Energy Allocation shall be available. The Energy Allocation function shall require Master Centralized Controller Energy Allocation Integrated System in conjunction with Non Touch Screen, Networked Centralized Controller.

GRAPHICAL USER INTERFACE

The Graphical User Interface (Integrated Centralized Control Web) shall require a field supplied PC or Tablet.

ICCW

The Integrated Centralized Control Web System (ICCW) interface shall enable the user to control multiple networked central controllers and shall provide additional functions such as energy apportionment from a single network PC configured with the Charge Calculation Tool. The ICCW shall be capable of controlling up to forty networked Centralized Controllers with a maximum of 2,000 indoor units across multiple CITY MULTI outdoor units. The ICCW shall be required if the user wants to simultaneously control more than 1 Centralized Controllers from a single PC or tablet using a single web browser session. Licensing per function, per Centralized Controller shall be required for the ICCW. Optional software features shall be available through the ICCW including energy apportionment and personalized web. These optional software features shall require the ICCW, advance purchase from the customer, and licensing from ICCW.

ICCW (Integrated System Software)	
Item	**Details**
ON/OFF	The units can turn ON and OFF for all floors or in a block, floor, or group of units.
Operation	The operation mode can be switched between COOL, DRY, FAN,

Modes	AUTO, and HEAT for all floors or in a block, floor, or group of units
Temperature Setting	Sets the temperature for a single group. Range of Temperature setting from 57°F – 87°F depending on operation mode and indoor unit model. Separate COOL and HEAT mode set points available depending on remote controller and connected mechanical equipment.
Fan Speed	The fan speed can be set to four stages for all floors or in a block, floor, or group of units
Air Direction	The air direction can be set in four vertical directions or to swing for all floors or in block, floor, or group of units. (The selectable air direction differs according to the model.)
Interlocked Unit ON/OFF LOSSNAY	If there is an interlocked unit (LOSSNAY), then the unit can be turned ON (strong/weak) or OFF for all floors or in a block, floor, or group of units. (Note that the ventilation mode cannot be selected for interlocked units.)
Local Operation Prohibit	The items for which operation with the local remote controller are to be prohibited can be selected for all floors or in a block, floor, or group of units. (The items that can be prohibited are ON/OFF, operation mode, set temperature and filter sign reset.)
Annual / Weekly Schedule	The annual/weekly schedule function can be used by registering the license. Two settings, such as seasonal settings for summer and winter, can be saved.
Power Rate Apportionment Charging	A watt-hour meter (WHM) with kWH pulse output is connected to calculate the air conditioning charges based on the amount each tenant's air-conditioner has operated. Five charging rates can be applied per day. ***OPTIONAL ENERGY APPORTIONMENT SOFTWARE (LIC-CHARGE) and PI Controller (PAC-Y60MCA) REQUIRED
History	Up to 3,000 items for the error history and up to 10,000 items for operation history can be saved. Each history file can be output as a daily report or monthly report in CSV format. (The operation history consists only of the operations carried out with the ICCW and is limited to some limited operation items.)
Operation Time Monitor	The cumulative operation time of each indoor unit can be viewed or output as a CSV format file. (This function is valid only when the

	charging function license is registered.)
Filter Sign Display Mask	The filter sign display at the remote controllers can be disabled.
Set Temperature Limit	The set temperature lower limit can be set for cooling and the upper limit for heating. (ME remote controller required)

ENERGY APPOINTMENT METHOD FOR CITY MULTI CENTRALIZED CONTROLLERS

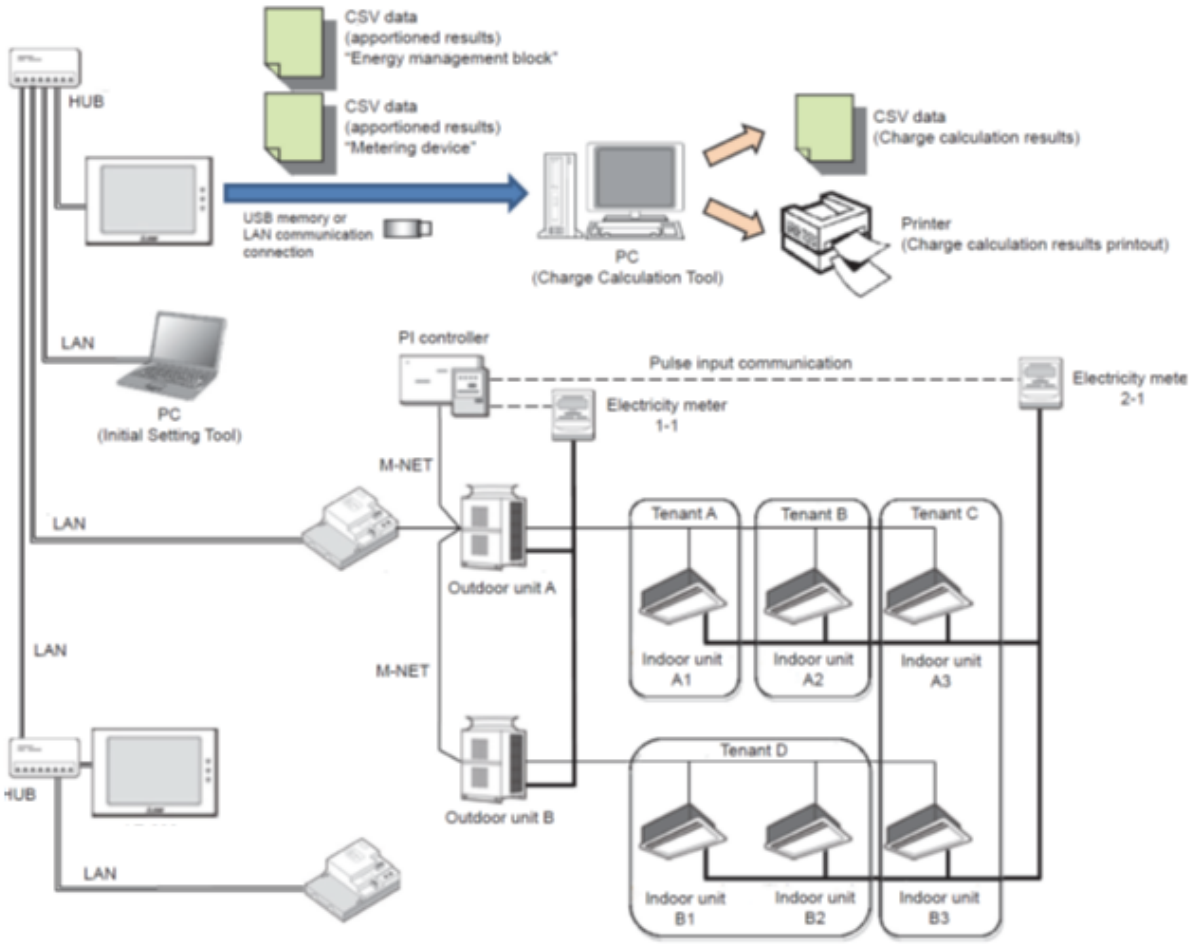

CMCN System Configuration

System Overview

For centralized systems serving multiple tenants for which one-to-one electricity metering is not possible, an apportioned electricity billing function that attributes just the electrical energy consumed by each individual tenant's air conditioner is required. The Energy Apportionment function takes the information on the electrical energy usage gathered from Watt Hour Meters (WHM) connected to dedicated breaker panels serving the system's outdoor units and synthesizes it with the information on the operating status of the indoor units that is collected by the CITY MULTI centralized controller(s).

Watt Hour Meters

Requirements:

The Watt Hour Meters (WHMs) to be used to read the electrical energy consumption of the outdoor units must be capable of a pulse output, which would be configured based on the current rating of the units. The associated current transformers/ transducers (CTs) must also be sized based on the current rating of either the individual outdoor units or the dedicated air conditioning electrical panels they are to be reading. The proper quantity of meters for a particular sized system must be selected in order to ensure sufficient resolution and hysteresis in the unit pulse output of the meters so as to ascribe an acceptable level of accuracy to the apportionment of energy usage for each tenant's system. The system is designed to work with any WHM capable of a pulse output that meets ANSI C12.20 class 0.2% or 0.5% accuracy standards.

Connection:

The WHMs are to be physically connected to the integrated pulse input module or an external Mitsubishi Electric PI Controller if such an input is not available or if there is a wiring length limitation or installation hardship. The cable type of the interconnecting wiring shall be according to the wiring specifications of the WHM manufacturer.

CITY MULTI Centralized Controller Requirements

Licensing:

Each centralized controller to which units are assigned that require the energy apportionment function must have the "LIC-Charge" software license purchased and properly unlocked in order to enable the operating status of the indoor units to be passed to the energy apportionment tool. The procedure for licensing the centralized controllers with this function and the necessary forms can be found on Mitsubishi Electric's technical documentation repository, mylinkdrive.com. Purchase Order information for the licenses will be required at the time of submission of the licensing request forms.

Dedicated master centralized controller for apportionment (no MNET connection)

A dedicated master centralized controller, for which the LIC-Charge license is purchased and the energy apportionment function enabled, must be provided in order to serve as the portal for exporting metering device and energy management data to a USB drive or to a PC via LAN connection. This means that by virtue of selecting this master centralized controller to serve this function, the MNET capability of this particular centralized controller will be disabled. All indoor units must be physically wired via MNET to other expansion centralized controllers, which must be physically wired via LAN with Static IP addresses and a network hub or switch to the master apportionment controller.

PC for collecting charge calculation results

A networked PC, which does not necessarily have to be dedicated to the task of collecting energy apportionment data, can be provided and loaded with the Charge Calculation Tool software for exporting data necessary to generate billing documentation to be performed by a third party. The system requirements of the PC are as follows:

Item	Requirements
CPU	1 GHz or better (at least 2 GHz recommended)
Memory	2GB or more
Screen Resolution	1024 x 768 or better
OS	Windows 7, Windows 8.1 (32bit/64bit)
System requirements	The system should meet the minimum requirement for Windows 7 or Windows 8.1 • Net Framework 4.5 or later
Internal LAN port or LAN card	100 BASE-TX or better
Porting device	Mouse, etc.

CMCN: SYSTEM INTEGRATION

BACnet® Integration:

The Mitsubishi Electric Cooling & Heating BACnet® hardware, which is built into all networked central controllers, shall be compliant with BACnet® Protocol (ANSI/ASHRAE 135-2010) and be Certified by the (BTL) BACnet® Testing Laboratories. The BACnet® interface shall support BACnet Broadcast Management (BBMD). The BACnet® interface shall support a maximum of 50 indoor units. Operation and monitoring points include, but are not limited to, on/off, operation mode, fan speed, prohibit remote controller, filter sign reset, alarm state, error code, and error address.

Licenses:

1. LIC-BACnet Master: Master Controller license for Master Centralized Controller and Non Touch Screen, Networked Centralized Controller
2. LIC-BACnet Expansion: Expansion Controller license for Expansion Controller and Non Touch Screen, Networked Centralized Controller

LIC-BACnet Specifications:

3. Control up to 50 groups
4. 1 to 16 indoor units can be collectively controlled in a group
5. Supports dual set point functionality (connected model dependant)
6. BTL Compliant
7. BACnet communication specifications are based on ANSI/ASHRAE Standards 135-2010

PC Requirements:

8. CPU: 1GHz or higher
9. Memory: 1GB or more
10. HDD Space: 100 MB or more
11. Screen Resolution: 1024 x 768 or higher
12. OS: Microsoft Windows 7 32-bit/64-bit, Microsoft 8.1 32-bit/64-bit. Not compatible with Windows Vista
13. Execution Environment: Microsoft .NET Framework 4.5 or later
14. Others: Pointing device such as a mouse, internet connection (required when installing a .NET Framework)

LIC-BACnet – System Example

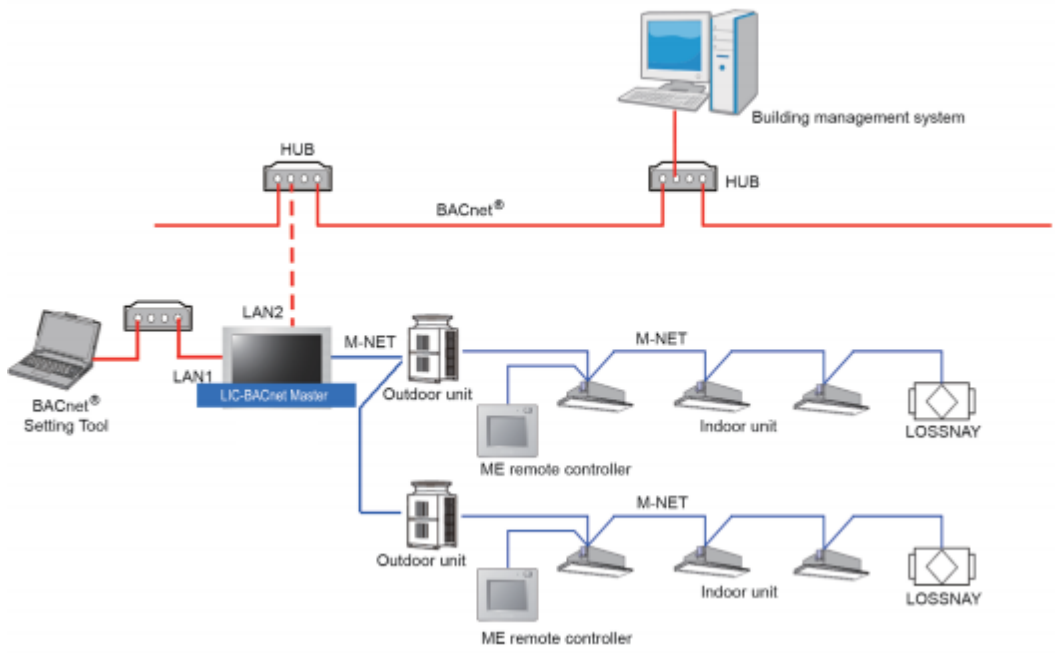

BACnet Point List

Object List
On Off Setup
On Off State, Number of ON/OFF, Cumulative operation time
Alarm Signal (4-digit error code)
Error Code
Operational Mode Setup
Operational Mode State
Fan Speed Setup
Fan Speed State
Room Temp [Water Temp]
Set Temp [Set Water Temp]
Set Temp Cool
Set Temp Heat

Set Temp Auto
Filter Sign [Circulating Water Exchange Sign]
Filter Sign Reset [Circulating Water Exchange Sign Reset]
Prohibition On Off
Prohibition Mode
Prohibition Filter Sign Reset [Prohibition Circulating Water Exchange Sign Reset]
Prohibition Set Temperature
M-NET Communication State
System Forced Off
Air Direction Setup
Air Direction State
Set High Limit Setback Temp
Set Low Limit Setback Temp
Ventilation Mode Setup
Ventilation Mode State
Air To Water Mode Setup
System Alarm Signal (4-digit error code)
PI Controller Alarm Signal (4-digit error code)
Group Apportioned Electric Energy
Interlocked Units Apportioned Electric Energy
PI controller Electric Energy 1–4
Pulse Input Electric Energy 1–4
Group Apportionment Parameter

Interlocked Units Apportionment Parameter
Night Purge State
Thermo On Off State
Trend Log Room Temp
Trend Log Group Apportioned Electric Energy
Trend Log Interlocked Units Apportioned Electric Energy
Trend Log PI controller Electric Energy 1–4
Trend Log Pulse Input Electric Energy 1–4
Trend Log Group Apportionment Parameter
Trend Log Interlocked Units Apportionment Parameter

Equipment Schedules

MITSUBISHI ELECTRIC TRANE HVAC US: CITY MULTI VRF OUTDOOR UNIT SCHEDULE

	System Tag	ACCU-1	ACCU-2	ACC-1	ACC-2	ACC-3	ACC-4	ACC-5
	Tag Reference	ACCU-1	ACCU-2	ACC-1	ACC-2	ACC-3	ACC-4	ACC-5
Nominal Data	M-NET Address	51, 52	63	18	19	20	21	22
	Model Number	PURY-HP192TSNU-A1	PURY-HP120TNU-A1	PUZ-HA24NHA1	PUY-A18NKA7	PUZ-HA24NHA1	PUY-A24NHA7	PUZ-HA24NHA1
	Modules	HP96, HP96	HP120					
	Nominal Cooling Capacity (BTU/h)	192,000	120,000	24,000	18,000	24,000	24,000	24,000
	Nominal Heating Capacity (BTU/h)	215,000	135,000	26,000		26,000		26,000
	Cooling Efficiency (I)EER [SEER]	20.4 / 11	20.95 / 10.55	0 [21.50]	0 [19.8]	0 [21.50]	0 [21.40]	0 [19.50]
	EER2 [SEER2]	0	0	0 []	0 []	0 []	0 []	0 []
	Heating COP @ 47°F [HSPF]	3.740	3.810	0 [11.30]	0 [Clg Only]	0 [11.30]	0 [Clg Only]	0 [10.60]
	Nom System Connected Capacity (% of NOM)	104.7 %	99.2 %	100.0 %	100.0 %	100.0 %	100.0 %	100.0 %
Design Conditions	Design Cooling Outdoor Temp DB (°F)	83.0	83.0	83.0	83.0	83.0	83.0	83.0
	Design Heating Outdoor Temp WB (°F)	-6.4	-6.4	-6.4	-6.4	-6.4	-6.4	-6.4
	Max Pipe Length from BC or 1st Joint (feet)	129.8	91.6	0.0	0.0	0.0	0.0	0.0
	Refrig Pipe Dim High/Low Pressure (inch) (See Note 4)	7/8 / 1-1/8	3/4 / 1-1/8	3/8 / 5/8	1/4 / 1/2	3/8 / 5/8	3/8 / 5/8	3/8 / 5/8
Performance Data	Corrected Cooling Total Capacity (BTU/h)	180,699.0	115,131.4	23,719.7	17,033.1	22,413.2	21,920.2	22,835.3
	Corrected Heating Capacity (BTU/h)	187,203.1	95,928.0	21,464.5	0.0	19,571.8	0.0	20,375.8
	Sound Pressure (dBA)	82/83	84.5/85.5	52/53	44	52/53	47	52/53
Compressor Data	Compressor Type	SCROLL	SCROLL	Scroll		Scroll		Scroll
	Compressor Quantity	2	1	1		1		1
	Preliminary Added Field Charge (See Note 5)	41.5	26.4	0.3	0.0	3.1	0.9	2.2
Electrical Data	Voltage / Phase	208/230V / 3-phase 3-wire	208/230V / 3-phase 3-wire	208/230V / 1-phase	208/230V / 1-phase	208/230V / 1-phase	208/230V / 1-phase	208/230V / 1-phase
	MCA 208/230 or [460V]	66/60, 66/60	66/60	17	11	17	19	17
	Recommended Fuse Size (RFS)	70/60, 70/60	70/60	25	15	25	25	25
	MOCP	110/100, 110/100	110/100	27	28	27	26	27
Notes / Options	Applicable System Notes - See Notes Below	1, 2, 3, 4, 5, 6, 7, 8, 9, 10, 11	1, 2, 3, 4, 5, 6, 7, 8, 9, 10, 11	1, 2, 3, 4, 5, 6, 7, 8, 9	1, 2, 3, 4, 5, 6, 7, 8, 9, 12	1, 2, 3, 4, 5, 6, 7, 8, 9	1, 2, 3, 4, 5, 6, 7, 8, 9, 12	1, 2, 3, 4, 5, 6, 7, 8, 9

Notes & Options:

1 Nominal cooling capacities are based on indoor coil EAT of 80/67°F (DB/WB), outdoor of 95°F (DB)
2 Nominal heating capacities are based on indoor coil EAT of 70°F (DB), outdoor of 43°F (WB)
3 Efficiency values for EER, IEER, COP are based on AHRI 1230 test method for mixture of ducted & non-ducted indoor units.
4 For systems with multiple modules, refrigerant pipe dimensions indicate total system combined piping downstream of module twinning.
5 Added field charge listed is in addition to factory charge, this must be updated based upon final as-built piping layout.
6 Factory representatives shall review the project prior to and throughout the installation of CITY MULTI equipment
7 Factory representatives shall startup and commission CITY MULTI equipment upon completion of equipment installations
8 Factory representatives shall provide on-site assistance for the BMS integration of the CITY MULTI equipment
9 Factory representatives shall provide end-user training on the CITY MULTI equipment upon completion of the installation of equipment
10 Provide Snow/Hail Kit to Prevent Damage or Snow Build-Up in Severe Winter Climates
11 Provide 24" Super Stand Kit
12 Provide Wind Baffle Kit for Cooling to -40F

MITSUBISHI ELECTRIC TRANE HVAC US: CITY MULTI VRF INDOOR UNIT SCHEDULE

	System Tag	ACCU-1	ACCU-1	ACCU-1	ACCU-1	ACCU-1	ACCU-1	ACCU-1	ACCU-1	ACCU-1	ACCU-1	ACCU-1	ACCU-1	ACCU-2	ACCU-2	ACCU-2	ACCU-2	ACCU-2	ACCU-2	ACC-1	ACC-2	ACC-3	ACC-4	ACC-5
	Tag Reference	FCU-113	FCU-119	FCU-121	FCU-123	FCU-125	FCU-199B	FCU-120	FCU-114	FCU-112B	FCU-114B	FCU-199A	FCU-112	FCU-110	FCU-110A	FCU-104	FCU-103	FCU-105	HP-101	HP-109	HP-116	HP-117	HP-127
Nominal Data	Room Name	Catering 113	Staff Room 119	VP Strategic Partnership 121	Conference 123	Huddle 125	Open Collab 102A	Small Lab 120	Cybersecurity 114	Office & Data 112B	Office & Data 114B	Open Collab 102A	Intelligence & Forensics Lab 112	Media Lab 110	Editing/Control & Secure Storage 110A	Simulation Lab 104	Lobby & Reception 103	Restroom 105	Vestibule N. 101	Data 109	Vestibule S. 116	Elec. 117	Mech. 127
	M-NET Address	1	2	3	4	5	6	7	8	9	10	11	12	13	14	15	16	17	18	19	20	21	22
	Model	PLFY-P05NFMU-ER1.TH	PLFY-P05NFMU-ER1.TH	PLFY-P05NFMU-ER1.TH	PLFY-P15NFMU-ER1.TH	PLFY-P05NFMU-ER1.TH	PLFY-P18NFMU-ER1.TH	PLFY-P12NFMU-ER1.TH	PEFY-P54NMAU-E4	PLFY-P05NFMU-E	PLFY-P05NFMU-E	PLFY-P18NFMU-ER1.TH	PEFY-P54NMAU-E4	PEFY-P30NMAU-E5	PLFY-P12NFMU-ER1.TH	PEFY-P48NMAU-E4	PEFY-P24NMAU-E4	PLFY-P05NFMU-ER1.TH	PLA-A24EA7R1.TH	PKA-A18LA.TH	PLA-A24EA7R1.TH	PKA-A24KA7.TH	PKA-A24KA7.TH
	Type	Ceiling-Cassette (Four-Way)	Ceiling-Cassette (Four-Way)	Ceiling-Cassette (Four-Way)	Ceiling-Cassette (Four-Way)	Ceiling-Cassette (Four-Way)	Ceiling-Cassette (Four-Way)	Ceiling-Cassette (Four-Way)	Ceiling-Concealed (Ducted)	Ceiling-Cassette (Four-Way)	Ceiling-Cassette (Four-Way)	Ceiling-Cassette (Four-Way)	Ceiling-Concealed (Ducted)	Ceiling-Concealed (Ducted)	Ceiling-Cassette (Four-Way)	Ceiling-Concealed (Ducted)	Ceiling-Concealed (Ducted)	Ceiling-Cassette (Four-Way)	Ceiling-Cassette (Four-Way)	Wall -Mounted	Ceiling-Cassette (Four-Way)	Wall -Mounted	Wall -Mounted
	Nominal Cooling Capacity (BTU/h)	5,000	5,000	5,000	15,000	5,000	18,000	12,000	54,000	5,000	5,000	18,000	54,000	30,000	12,000	48,000	24,000	5,000	24,000	18,000	24,000	24,000	24,000
	Nominal Heating Capacity (BTU/h)	5,600	5,600	5,600	17,000	5,600	20,000	13,500	60,000	5,600	5,600	20,000	60,000	34,000	13,500	54,000	27,000	5,600	26,000	19,000	26,000	26,000	26,000
Design Conditions	Cooling Design Entering Temp DB/WB (°F) / [Water in temp]	80.0/67.0	80.0/67.0	80.0/67.0	80.0/67.0	80.0/67.0	80.0/67.0	80.0/67.0	80.0/67.0	80.0/67.0	80.0/67.0	80.0/67.0	80.0/67.0	80.0/67.0	80.0/67.0	80.0/67.0	80.0/67.0	80.0/67.0	80.0/67.0	80.0/67.0	80.0/67.0	80.0/67.0	80.0/67.0
	Heating Design Entering Temp DB/WB (°F) / [Water in temp]	70.0	70.0	70.0	70.0	70.0	70.0	70.0	70.0	70.0	70.0	70.0	70.0	70.0	70.0	70.0	70.0	70.0	70.0	70.0	70.0	70.0	70.0
	Cooling Diversity Full/Partial (See Note 5, 6)	FULL DEMAND	FULL DEMAND	FULL DEMAND	FULL DEMAND	FULL DEMAND	FULL DEMAND	FULL DEMAND	FULL DEMAND	FULL DEMAND	FULL DEMAND	FULL DEMAND	FULL DEMAND	FULL DEMAND	FULL DEMAND	FULL DEMAND	FULL DEMAND	FULL DEMAND	FULL DEMAND	FULL DEMAND	FULL DEMAND	FULL DEMAND	FULL DEMAND
	Heating Diversity Full/Partial (See Note 5, 6)	FULL DEMAND	FULL DEMAND	FULL DEMAND	FULL DEMAND	FULL DEMAND	FULL DEMAND	FULL DEMAND	FULL DEMAND	FULL DEMAND	FULL DEMAND	FULL DEMAND	FULL DEMAND	FULL DEMAND	FULL DEMAND	FULL DEMAND	FULL DEMAND	FULL DEMAND	FULL DEMAND	FULL DEMAND	FULL DEMAND	FULL DEMAND	FULL DEMAND
	Refrig Pipe Dim Liquid/Suction (inch)	1/4 / 1/2	1/4 / 1/2	1/4 / 1/2	1/4 / 1/2	1/4 / 1/2	1/4 / 1/2	1/4 / 1/2	3/8 / 5/8	1/4 / 1/2	1/4 / 1/2	1/4 / 1/2	3/8 / 5/8	3/8 / 5/8	1/4 / 1/2	3/8 / 5/8	3/8 / 5/8	1/4 / 1/2	5/8 / 3/8	1/2 / 1/4	5/8 / 3/8	5/8 / 3/8	5/8 / 3/8
Performance Data	Cooling Total Capacity (BTU/h)	4,495.0	4,495.0	4,495.0	13,485.0	4,495.0	16,182.0	10,788.0	48,546.0	4,495.0	4,495.0	16,182.0	48,546.0	28,686.4	11,474.5	45,898.2	22,949.1	4,781.1	23,719.7	17,033.1	22,413.2	21,920.2	22,835.3
	Cooling Sensible Capacity (BTU/h)	4,196.6	4,196.6	4,196.6	9,245.3	4,196.6	11,131.8	7,569.8	35,853.9	4,196.6	4,196.6	11,131.8	35,853.9	25,434.4	7,855.5	32,718.0	18,810.1	4,302.0	20,602.3	12,753.7	20,113.1	17,715.2	18,068.6
	Heating Capacity (BTU/h)	4,678.0	4,678.0	4,678.0	14,201.0	4,678.0	16,707.1	11,277.3	50,121.3	4,678.0	4,678.0	16,707.1	50,121.3	24,321.8	9,657.2	38,628.7	19,314.4	4,005.9	21,464.5	0.0	19,571.8	0.0	20,375.8
	Estimated Cooling Coil LAT (°F) / [LWT]	65.3	65.3	65.3	56.8	65.3	56.3	57.9	55.2	65.3	65.3	56.3	55.2	60.4	57.0	55.5	59.1	65.0	55.1	52.2	55.7	57.6	57.2
	Estimated Heating Coil LAT (°F) / [LWT]	86.1	86.1	86.1	105.0	86.1	104.9	102.4	104.1	86.1	86.1	104.9	104.1	88.4	97.7	98.4	91.0	83.7	95.5	70.0	93.2	70.0	95.3
Fan / Water Flow Data	Fan Speed Setting	HIGH	HIGH	HIGH	HIGH	HIGH	HIGH	HIGH	HIGH	HIGH	HIGH	HIGH	HIGH	HIGH	HIGH	HIGH	HIGH	HIGH	HIGH	HIGH	HIGH	HIGH	HIGH
	Peak Fan Airflow (cfm) / [Design gpm]	280	280	280	390	280	460	335	1413	280	280	460	1413	1271	335	1306	883	280	810	450	810	775	775
	Max Fan ESP Setting 208V/230V (IN WG)								0.6/0.6				0.6/0.6	0.6/0.6		0.6/0.6	0.6/0.6						
	Sound Pressure Per Fan Speed 208V/230V (dBA)	26-28-30	26-28-30	26-28-30	28-33-39	26-28-30	33-39-43	26-30-34	34-38-42	26-28-30	26-28-30	33-39-43	34-38-42	31-39-43	26-30-34	35-40-44	31-35-39	26-28-30	28 - 30 - 33 - 36	34-39-44-48	28 - 30 - 33 - 36	39 - 42 - 45	39 - 42 - 45
Electrical Data	Voltage / Phase	208/230V/1-phase	208/230V/1-phase	208/230V/1-phase	208/230V/1-phase	208/230V/1-phase	208/230V/1-phase	208/230V/1-phase	208/230V/1-phase	208/230V/1-phase	208/230V/1-phase	208/230V/1-phase	208/230V/1-phase	208/230V/1-phase	208/230V/1-phase	208/230V/1-phase	208/230V/1-phase	208/230V/1-phase	208/230V/1-phase	208/230V/1-phase	208/230V/1-phase	208/230V/1-phase	208/230V/1-phase
	Power Cooling 208V/230V (kW)	0.020	0.020	0.020	0.030	0.020	0.040	0.020	0.252	0.020	0.020	0.040	0.252	0.142	0.020	0.242	0.142	0.020					
	Power Heating 208V/230V (kW)	0.02	0.02	0.02	0.03	0.02	0.04	0.02	0.25	0.02	0.02	0.04	0.25	0.22	0.02	0.24	0.14	0.02					
	Electrical MCA/MFS	0.24/0.24/15	0.24/0.24/15	0.24/0.24/15	0.35/0.35/15	0.24/0.24/15	0.5/0.5/15	0.29/0.29/15	4.38/15	0.24/0.24/15	0.24/0.24/15	0.5/0.5/15	4.38/15	4.25/15	0.29/0.29/15	4.38/15	2.88/15	0.24/0.24/15	Powered by Outdoor	Powered by Outdoor	Powered by Outdoor	Powered by Outdoor	Powered by Outdoor
	Condensate Removal Rate (gal/hr)	0.09	0.09	0.09	0.58	0.09	0.71	0.45	1.75	0.09	0.09	0.71	1.75	1.04	0.45	1.53	0.82	0.09	0.42	0.60	0.42	1.30	1.30
	Actual Port Assignments																						
Notes / Options	Applicable System Notes - See Notes Below	1, 2, 3, 4, 5, 6	1, 2, 3, 4, 5, 6	1, 2, 3, 4, 5, 6	1, 2, 3, 4, 5, 6	1, 2, 3, 4, 5, 6	1, 2, 3, 4, 5, 6	1, 2, 3, 4, 5, 6	1, 2, 3, 4, 5, 6	1, 2, 3, 4, 5, 6	1, 2, 3, 4, 5, 6	1, 2, 3, 4, 5, 6	1, 2, 3, 4, 5, 6	1, 2, 3, 4, 5, 6	1, 2, 3, 4, 5, 6	1, 2, 3, 4, 5, 6	1, 2, 3, 4, 5, 6	1, 2, 3, 4, 5, 6	1, 2, 3, 4, 5, 6	1, 2, 3, 4, 5, 6	1, 2, 3, 4, 5, 6	1, 2, 3, 4, 5, 6	1, 2, 3, 4, 5, 6

Notes & Options:

1 Nominal cooling capacities are based on indoor coil EAT of 80/67°F (DB/WB), outdoor of 95°F (DB)
2 Nominal heating capacities are based on indoor coil EAT of 70°F (DB), outdoor of 43°F (WB)
3 See outdoor unit schedule for outdoor ambient conditions, connected capacity, and other factors associated with corrected capacities
4 See schematic piping/control diagram for indication of required indoor unit remote controllers, system controllers, and integration devices.
5 Full demand corrected capacity includes de-rate associated with indoor vs. outdoor connected capacity indicated on outdoor unit schedule for associated system.
Partial corrected capacity assumes sufficient diversity exists such that the connected capacity de-rate does not apply.
It is the designer's responsibility to ensure "Diamond System Builder" is set in the appropriate output capacity setting (full demand/partial demand) prior to generating this schedule.
6 It is recommended to always base heating corrected capacity on full demand.
7 Provide Flush Mount Sensor
8 Provide Condensate Pump for Wall Mounted Indoor Units up to 120,000 BTUs 100-240VAC

VRF HEAT RECOVERY BRANCH CIRCUIT CONTROLLER

	System Tag	ACCU-1	ACCU-2
	Tag Reference	BS-1	BS-2
Nominal Data	M-NET Address	53	64
	Model Number	CMB-P1016NU-JA1	CMB-P108NU-J1
	Type (double / Main / Sub)	Main	Single
	Number of Ports	16	8
	Connected Capacity to BC	201,000.0	119,000.0
Electrical Data	Voltage / Phase	208/230V / 1-phase	208/230V / 1-phase
	Power Cooling 208V/230V (kW)	0.258/0.333	0.122/0.157
	Power Heating 208V/230V (kW)	0.137/0.176	0.061/0.078
	MCA 208/230	1.57/1.82	0.74/0.87
Notes / Options	Applicable System Notes - See Notes Below	1	1

Notes & Options:

1 Include Diamondback Ball Valves BV-Series, 700PSIG working pressure, full port, 410A rated.

2 For sub BC controller CMB-P-NU-GB1 or -GB, the total connectable indoor unit capacity can be 126,000 BTUs or less. If two sub BC controllers are used, the total indoor unit capacity connected to BOTH sub BC controllers also cannot exceed 126,000 BTUs. For sub BC controller CMB-P1016NU-HB1 the total connectable indoor unit capacity can be 126,000 BTUs or less. However, if two sub controllers are used, and one of them is CMB-1016NU-HB1, the total indoor unit capacity connected to BOTH sub controllers must NOT exceed 168,000 BTUs.

3 Provide Refrigeration Ball Valve-Braze/Schrader/Insulated - 3/8" size

4 Provide Refrigeration Ball Valve-Braze/Schrader/Insulated - 5/8" size

Design View Piping Diagrams

Indoor Units:	12 / 1 to 48	
Capacity:	201 / 96 to 288 (104.7%)	
* Connectable capacity is not actual capacity.		
Total Pipe Length:	1105.8 / 1953.5	feet
Furthest Actual:	167.0 / 541.0	feet
Furthest Equiv.:	190.0 / 623.0	feet
Furthest IU from BC Actual:	120.0 / 131.0	feet
Furthest IU from BC Equiv.:	129.8 / 131.0	feet
Furthest IU from BC Thru Sub BC Actual:	0.0 / 0.0	feet
Furthest IU from BC Thru Sub BC Equiv.:	0.0 / 0.0	feet

Correction Factors

Outdoor Unit Capacity:	1.01	1.00
Temperature:	1.03	0.96
Piping Length:	0.91	0.96
Defrosting:	-	0.95
User Derate:	1.00	1.00
Total Derate:	0.94	0.87
Additional Refrigerant:	41.47 lb	
Total Refrigerant Amount:	89.09 lb	

Conditions (°F)

Cooling
Indoor DB 80.0 Humidity 51.8% Indoor WB 67.0
Outdoor DB 83.0

Heating
Indoor DB 70.0
Outdoor DB -6.0 Humidity 82.1% Outdoor WB -6.4

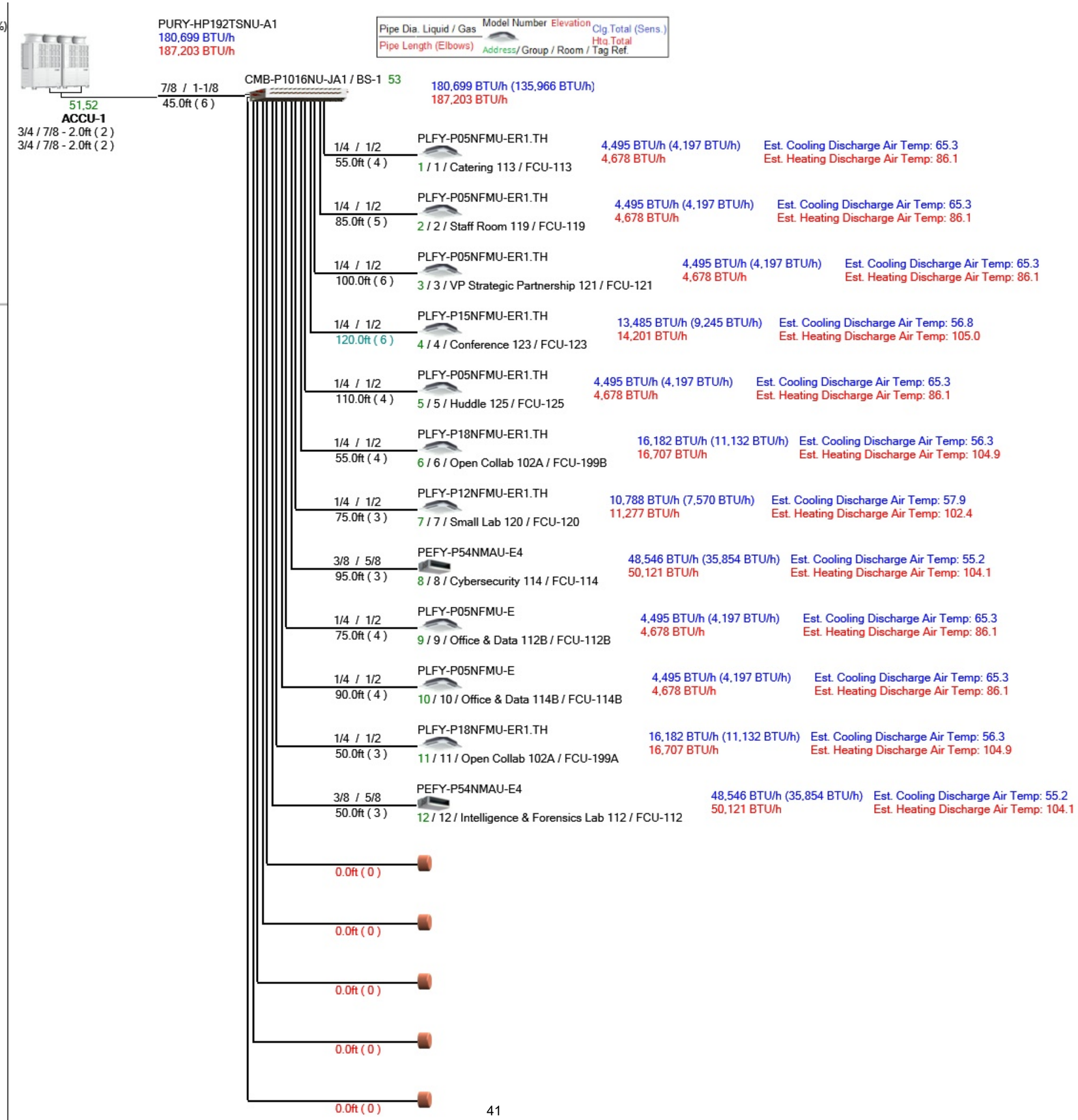

Indoor Units:	5 / 1 to 30	
Capacity:	119 / 60 to 180	(99.2%)
* Connectable capacity is not actual capacity.		
Total Pipe Length:	484.5 / 1936.0	feet
Furthest Actual:	130.0 / 541.0	feet
Furthest Equiv.:	146.4 / 623.0	feet
Furthest IU from BC Actual:	85.0 / 131.0	feet
Furthest IU from BC Equiv.:	91.6 / 131.0	feet
Furthest IU from BC Thru Sub BC Actual:	0.0 / 0.0	feet
Furthest IU from BC Thru Sub BC Equiv.:	0.0 / 0.0	feet

Correction Factors

Outdoor Unit Capacity:	1.00	1.00
Temperature:	1.06	0.78
Piping Length:	0.92	0.98
Defrosting:	-	0.95
User Derate:	1.00	1.00
Total Derate:	0.96	0.71
Additional Refrigerant:	26.40 lb	
Total Refrigerant Amount:	50.21 lb	

Conditions (°F)

Cooling
Indoor DB 80.0 Humidity 51.8% Indoor WB 67.0
Outdoor DB 83.0

Heating
Indoor DB 70.0
Outdoor DB -6.0 Humidity 82.1% Outdoor WB -6.4

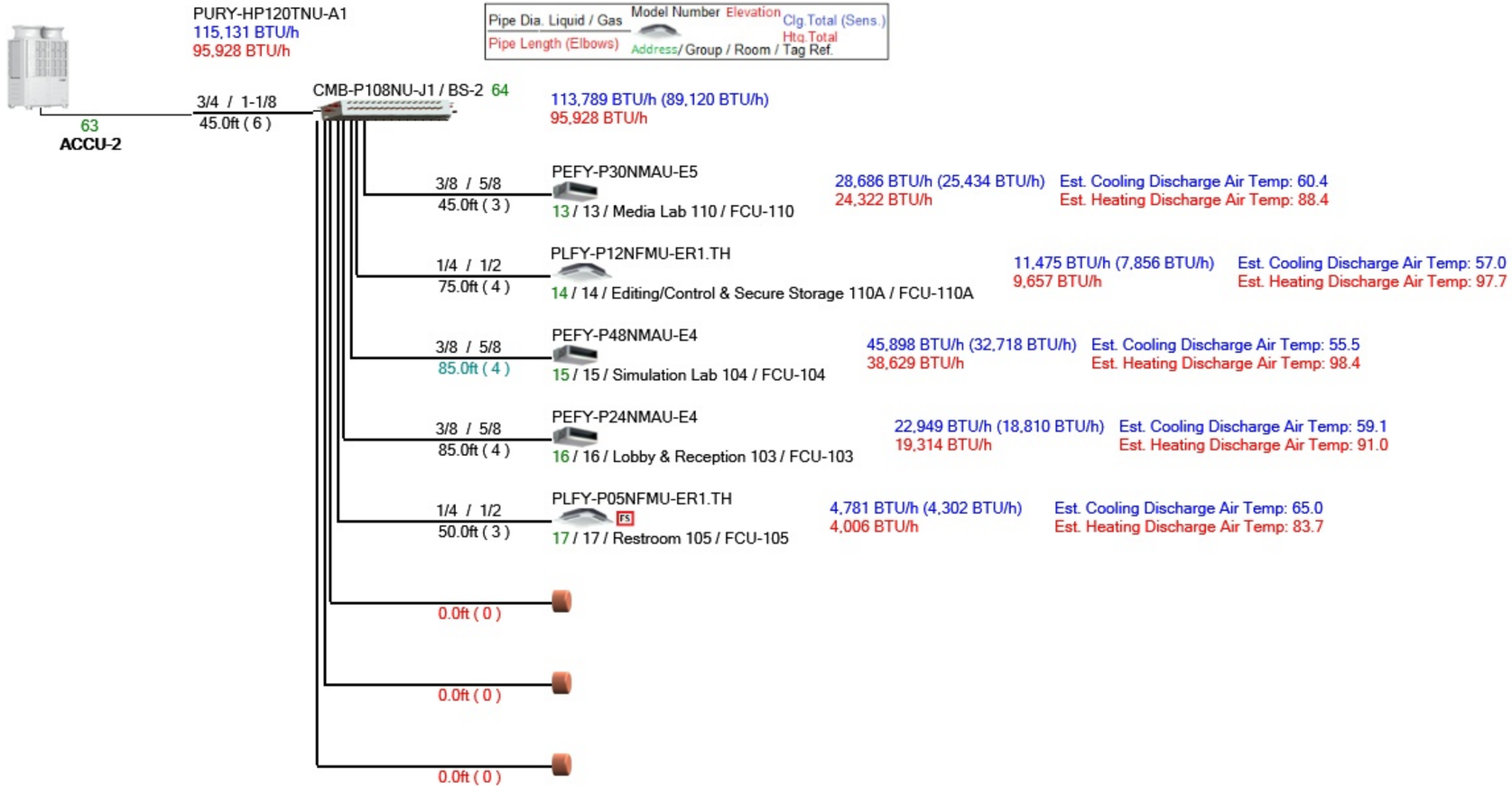

Indoor Units:	1 / 1 to 1	
Capacity:	24 / 12 to 24 (100.0%)	
* Connectable capacity is not actual capacity.		
Total Pipe Length:	76.0 / 165.0	feet

Correction Factors

Temperature:	1.09	0.86
Piping Length:	0.95	1.00
Defrosting:	-	1.00
User Derate:	1.00	1.00
Total Derate:	0.99	0.83

Additional Refrigerant:	0.26	lb
Total Refrigerant Amount:	7.98	lb

Conditions (°F)

Cooling

Indoor DB 80.0 Humidity 51.8% Indoor WB 67.0
Outdoor DB 83.0

Heating

Indoor DB 70.0
Outdoor DB -6.0 Humidity 82.1% Outdoor WB -6.4

18
ACC-1

PUZ-HA24NHA1

Pipe Dia. Liquid / Gas	Model Number	Elevation	Clg.Total (Sens.)
Pipe Length (Elbows)	Address/ Group / Room / Tag Ref.		Htg.Total

3/8 / 5/8
70.0ft (6)

PLA-A24EA7R1.TH
18 / 18 / Vestibule N. 101 / HP-101

23,720 BTU/h (20,602 BTU/h) Est. Cooling Discharge Air Temp: 55.1
21,465 BTU/h Est. Heating Discharge Air Temp: 95.5

Indoor Units:	1 / 1 to 1
Capacity:	18 / 9 to 18 (100.0%)

* Connectable capacity is not actual capacity.

Total Pipe Length:	39.9 / 165.0	feet

Correction Factors

Temperature:	1.05
Piping Length:	0.95
User Derate:	1.00
Total Derate:	0.95

Additional Refrigerant:	0.00	lb
Total Refrigerant Amount:	4.87	lb

Conditions (°F)

Cooling

Indoor DB 80.0 Humidity 51.8% Indoor WB 67.0
Outdoor DB 83.0

Heating

Indoor DB 70.0
Outdoor DB -6.0 Humidity 82.1% Outdoor WB -6.4

PUY-A18NKA7

Pipe Dia. Liquid / Gas	Model Number	Elevation	Clg.Total (Sens.)
Pipe Length (Elbows)	Address/Group / Room / Tag Ref.		Htg.Total

19
ACC-2

1/4 / 1/2
35.0ft (5)

PKA-A18LA.TH
FS
19 / 19 / Data 109 / HP-109

17,033 BTU/h (12,754 BTU/h) Est. Cooling Discharge Air Temp: 52.2

Indoor Units:	1 / 1 to 1
Capacity:	24 / 12 to 24 (100.0%)

* Connectable capacity is not actual capacity.

Total Pipe Length:	141.0 / 165.0	feet

Correction Factors

Temperature:	1.09	0.86
Piping Length:	0.90	0.91
Defrosting:	-	1.00
User Derate:	1.00	1.00
Total Derate:	0.93	0.75

Additional Refrigerant:	3.11	lb
Total Refrigerant Amount:	10.82	lb

Conditions (°F)

Cooling

Indoor DB 80.0 Humidity 51.8% Indoor WB 67.0
Outdoor DB 83.0

Heating

Indoor DB 70.0
Outdoor DB -6.0 Humidity 82.1% Outdoor WB -6.4

PUZ-HA24NHA1

Pipe Dia. Liquid / Gas	Model Number	Elevation	Clg.Total (Sens.)
Pipe Length (Elbows)	Address / Group / Room / Tag Ref.		Htg.Total

20
ACC-3

3/8 / 5/8
135.0ft (6)

PLA-A24EA7R1.TH
20 / 20 / Vestibule S. 116 / HP-116

22,413 BTU/h (20,113 BTU/h) Est. Cooling Discharge Air Temp: 55.7
19,572 BTU/h Est. Heating Discharge Air Temp: 93.2

Indoor Units: 1 / 1 to 1
Capacity: 24 / 12 to 24 (100.0%)
* Connectable capacity is not actual capacity.
Total Pipe Length: 119.9 / 225.0 feet

Correction Factors

Temperature: 1.05
Piping Length: 0.92
User Derate: 1.00

Total Derate: 0.91
Additional Refrigerant: 0.94 lb
Total Refrigerant Amount: 8.62 lb

Conditions (°F)

Cooling
Indoor DB 80.0 Humidity 51.8% Indoor WB 67.0
Outdoor DB 83.0

Heating
Indoor DB 70.0
Outdoor DB -6.0 Humidity 82.1% Outdoor WB -6.4

PUY-A24NHA7

Pipe Dia. Liquid / Gas | Model Number | Elevation | Clg.Total (Sens.)
Pipe Length (Elbows) | Address/Group / Room / Tag Ref. | Htg.Total

21
ACC-4

3/8 / 5/8
115.0ft (5)

PKA-A24KA7.TH
FS
21 / 21 / Elec. 117 / HP-117

21,920 BTU/h (17,715 BTU/h) Est. Cooling Discharge Air Temp: 57.6

Indoor Units:	1 / 1 to 1
Capacity:	24 / 12 to 24 (100.0%)

* Connectable capacity is not actual capacity.

Total Pipe Length:	120.0 / 165.0 feet

Correction Factors

Temperature:	1.09	0.86
Piping Length:	0.91	0.95
Defrosting:	-	1.00
User Derate:	1.00	1.00
Total Derate:	0.95	0.78

Additional Refrigerant:	2.19 lb
Total Refrigerant Amount:	9.90 lb

Conditions (°F)

Cooling

Indoor DB 80.0 Humidity 51.8% Indoor WB 67.0
Outdoor DB 83.0

Heating

Indoor DB 70.0
Outdoor DB -6.0 Humidity 82.1% Outdoor WB -6.4

22
ACC-5

PUZ-HA24NHA1

3/8 / 5/8
115.0ft (5)

PKA-A24KA7.TH
FS
22 / 22 / Mech. 127 / HP-127

Pipe Dia. Liquid / Gas | Model Number | Elevation | Clg.Total (Sens.)
Pipe Length (Elbows) | Address / Group / Room / Tag Ref. | Htg.Total

22,835 BTU/h (18,069 BTU/h) Est. Cooling Discharge Air Temp: 57.2
20,376 BTU/h Est. Heating Discharge Air Temp: 95.3

AutoCAD Piping & Wiring Diagrams

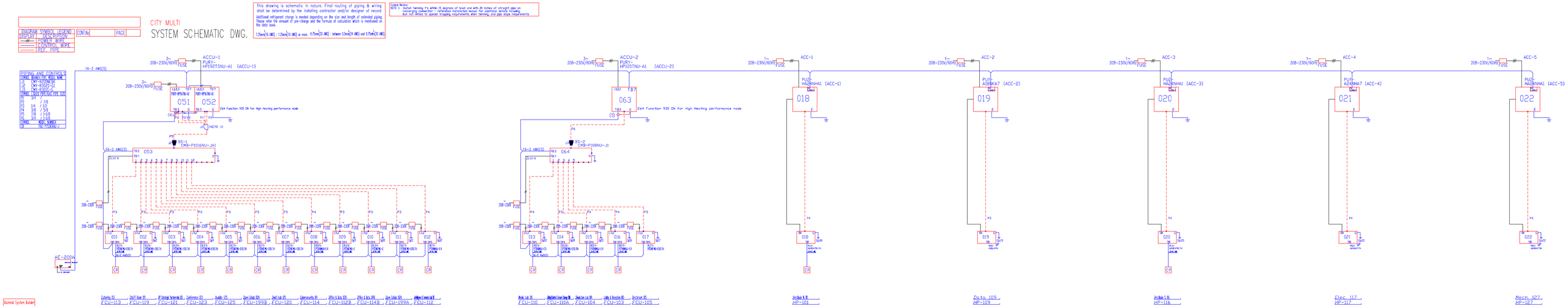

Submittal Documents

CITYMULTI®

CMB-P1016NU-JA1
16 BRANCH (MAIN BC)

MITSUBISHI ELECTRIC
HEATING & AIR CONDITIONING

Job Name:
System Reference: Date:

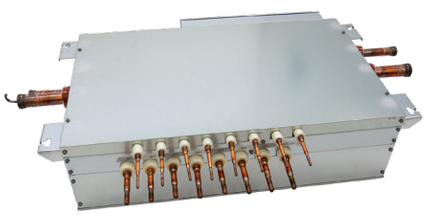

Specifications			System
Unit Type			CMB-P1016NU-JA1
Indoor Unit Capacity Connectable to 1 Branch		BTU/H	54,000
Number Of Branches			16
Electrical Power Requirements			208/230V, 1-phase, 60 Hz
Minimum Circuit Ampacity (MCA)		A	1.6/1.8
Maximum Overcurrent Protection (MOCP)		A	20
Power Input (208 / 230V)	Cooling	kW	1.25 / 1.45
Power Input (208/230V)	Heating	kW	0.66 / 0.77/
Current Input (208/230V)	Cooling	A	0.258 / 0.333/
	Heating	A	0.137 / 0.176
External Dimensions		In. [mm]	9-7/8 x 44-11/16 x 21-1/2 [250 x 1,135 x 545]
Net Weight		Lbs. [kg]	150 [68]
External finish			Galvanized steel plate (Lower part drain pan: Pre-coated galvanized sheets + powder coating) ()
Connectable Outdoor / Heat Source Unit Capacity			72,000 to 336,000
Field drain pipe size		In. [mm]	3/4 NPT
Refrigerant			R410A
Sound power level (measured in anechoic room)	Defrost	dB(A)	50
Sound pressure level (measured in anechoic room)	Rated operation	dB(A)	68.0
	Defrost	dB(A)	74

NOTES:
1. The equipment is for use with R410A refrigerant only.
2. When possible, avoid installing the BC controller within 15 Ft. of sound sensitive areas.
3. Rated operation sound data is based on cooling mode. Sound data may vary depending on outdoor unit capacity and operation mode.
4. Sound pressure/power levels obtained via testing in an anechoic chamber. Actual sound pressure levels may be greater due to ambient noise and/or deflection
5. Sound pressure values were obtained at a test location approximately 5 Ft. from the unit
6. The solenoid valve switching sound pressure value is 56 dB(A) for all units
7. The unit is intended for installation in an indoor environment only
8. For details regarding installation specifics, please refer to the product's Installation Manual.

© 2022 Mitsubishi Electric Trane HVAC US LLC. All rights reserved.

INDOOR UNIT ACCESSORIES: CMB-P1016NU-JA1

Ball Valve	Ball Valve (3/8” SAE Brazed)	☐ BV38BBSI
	Ball Valve (5/8” SAE Brazed)	☐ BV58BBSI
Condensate	Blue Diamond (Advanced) Mini Condensate Pump w/ Reservoir & Sensor (208/230V) [recommended]	☐ X87-721
	Blue Diamond (MicroBlue) Mini Condensate Pump (110/208/230V) up to 18,000 BTU/H	☐ X86-003
	Sauermann Condensate Pump	☐ SI30-230
Control Wire	M-Net Control Wire, 1,000’ Roll (16-AWG, Standard, Twisted Pair, Shielded, Jacketed- Plenum rated)	☐ CW162S-1000
	M-Net Control Wire, 250’ Roll (16-AWG, Standard, Twisted Pair, Shielded, Jacketed- Plenum rated)	☐ CW162S-250
Port Adapter	Joint Pipe Adapter	☐ CMY-R160-J1
Valves Adaptors & Headers	Branch Joint (Downstream capacity 127,000-216,000 BTU/H)	☐ CMY-R202S-G
	Branch Joint (Downstream capacity 217,000-234,000 BTU/H)	☐ CMY-R203S-G
	Branch Joint (Downstream capacity 235,000-360,000 BTU/H)	☐ CMY-R204S-G
	Branch Joint (Downstream capacity 73,000-96,000 BTU/H)	☐ CMY-Y102LS-G2
	Branch Joint (Downstream capacity ≤126,000 BTU/H)	☐ CMY-R201S-G
	Branch Joint (Downstream capacity ≤126,000 BTU/H)	☐ CMY-Y202S-G2
	Branch Joint (Downstream capacity ≤72,000 BTU/H)	☐ CMY-Y102SS-G2
	Branch Joint (Downstream capacity ≥316,000 BTU/H)	☐ CMY-R205S-G
	Reducer (Between Main and Sub BC)	☐ CMY-R303S-G1
	Reducer (Between ODU and BC)	☐ CMY-R302S-G1

© 2022 Mitsubishi Electric Trane HVAC US LLC. All rights reserved.

INDOOR UNIT DIMENSIONS: CMB-P1016NU-JA1

CMB-P108, 1012, 1016NU-JA1

Unit: mm(in)

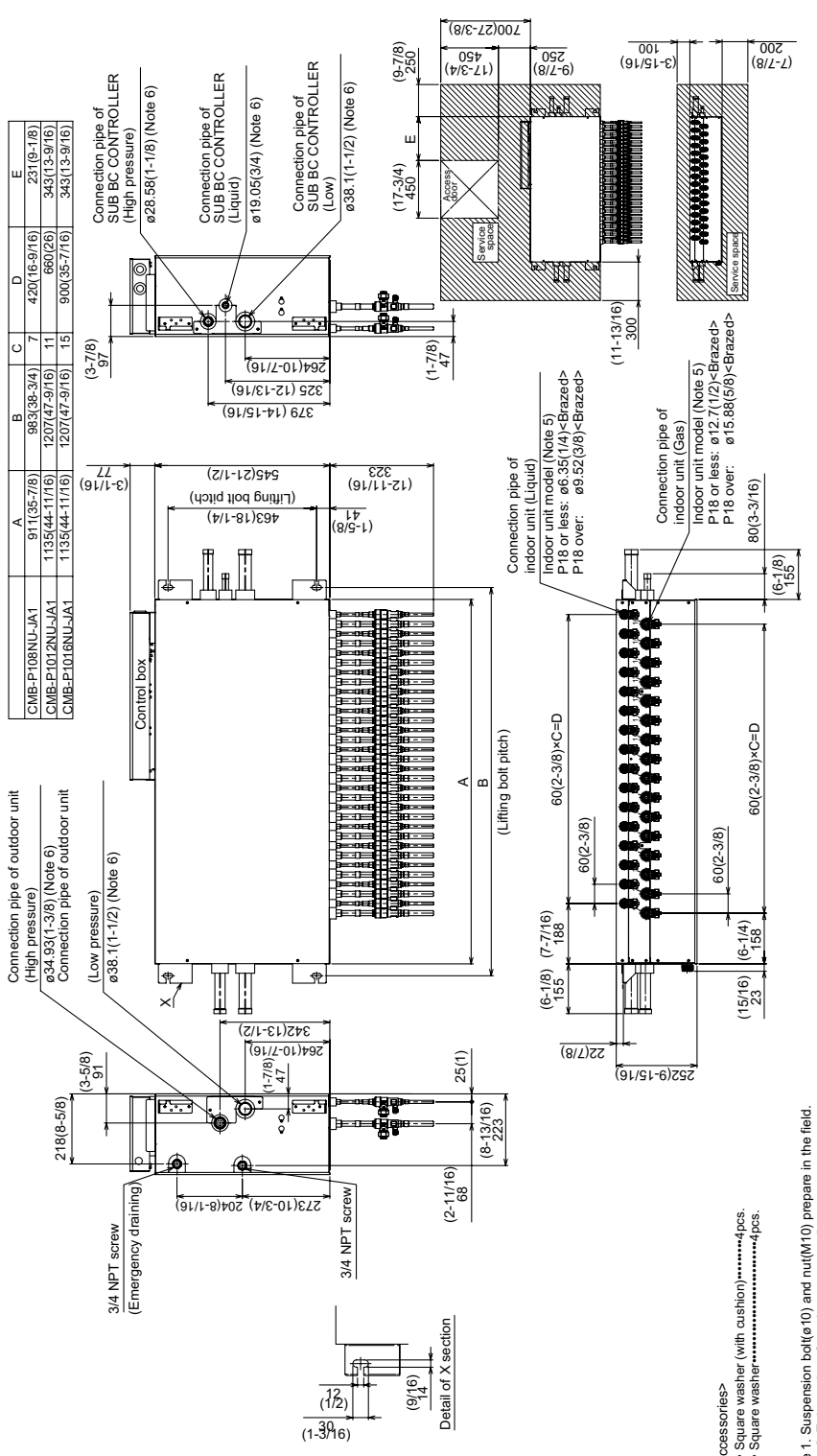

	A	B	C	D	E
CMB-P108NU-JA1	911(35-7/8)	983(38-3/4)	7	420(16-9/16)	231(9-1/8)
CMB-P1012NU-JA1	1135(44-11/16)	1207(47-9/16)	11	660(26)	343(13-9/16)
CMB-P1016NU-JA1	1135(44-11/16)	1207(47-9/16)	15	900(35-7/16)	343(13-9/16)

Table-1. To outdoor/heat source unit (Note.6)

Connectable unit capacity	High press. Pipe	Low press. Pipe	
P72	ø15.88(5/8)	ø19.05(3/4)	
P96	ø19.05(3/4)	ø22.2(7/8)	
P120	ø19.05(3/4)	ø22.2(7/8) or ø28.58(1-1/8)	*
P144 to P192	ø22.2(7/8)	ø28.58(1-1/8)	
P216	ø22.2(7/8) or ø28.58(1-1/8)	ø28.58(1-1/8)	*
P240	ø22.2(7/8) or ø28.58(1-1/8)	ø34.93(1-3/8)	*
P264 to P288	ø28.58(1-1/8)	ø34.93(1-3/8)	
P312	ø28.58(1-1/8)	ø34.93(1-3/8) or ø41.28(1-5/8)	*
P336	ø28.58(1-1/8)	ø41.28(1-5/8)	

*For the refrigerant pipe size, refer to Installation Manual of outdoor units/heat source units.

Table-2. To other BC controller (Note.6)

Total downstream Indoor unit capacity	High press. Pipe	Liquid Pipe	Low press. Pipe
~P72	ø15.88(5/8)	ø9.52(3/8)	ø19.05(3/4)
P73~108	ø19.05(3/4)	ø9.52(3/8)	ø22.2(7/8)
P109~126	ø19.05(3/4)	ø12.7(1/2)	ø28.58(1-1/8)
P127~144	ø22.2(7/8)	ø12.7(1/2)	ø28.58(1-1/8)
P145~216	ø22.2(7/8)	ø15.88(5/8)	ø28.58(1-1/8)
P217~234	ø28.58(1-1/8)	ø15.88(5/8)	ø28.58(1-1/8)
P235~288	ø28.58(1-1/8)	ø19.05(3/4)	ø34.93(1-3/8)
P289~360	ø28.58(1-1/8)	ø19.05(3/4)	ø41.28(1-5/8)
P361~	ø34.93(1-3/8)	ø19.05(3/4)	ø41.28(1-5/8)

<Accessories>
- Square washer (with cushion)••••••••4pcs.
- Square washer••••••••••••••••••••••••••••4pcs.

Note
1. Suspension bolt(ø10) and nut(M10) prepare in the field.
2. Take notice of service space as shown. (Please give attention not to occupy service space by letting ducts and pipes through.)
3. Please take service space for connection pipe of SUB BC CONTROLLER.
4. Install this product in a location where noise (refrigerant noise) emitted by the unit will not disturb the neighbors. (For use in quiet environments with low background noise, position the BC CONTROLLER at least 5m away from any indoor units.)
5. Refer to the Installation Manual for refrigerant piping diameter size when connecting plural indoor units with 1 branch.
6. Refer to the Table-1,2 connection pipe of outdoor unit or SUB BC CONTROLLER diameter size.
7. Refer to the Installation Manual for insulation of connection pipe and drain piping.
8. Do not place the BC controller directly on the floor.

1340 Satellite Boulevard Suwanee, GA 30024
Toll Free: 800-433-4822 www.mehvac.com

Specifications are subject to change without notice.

© 2022 Mitsubishi Electric Trane HVAC US LLC. All rights reserved.

CITYMULTI®

PLFY-P05NFMU-ER1.TH
5,000 BTU/H 22” X 22” 4-WAY CEILING CASSETTE

MITSUBISHI ELECTRIC
HEATING & AIR CONDITIONING

Job Name:
System Reference: Date:

GENERAL FEATURES
- Square edge, sleek design
- 3D i-see Sensor™ available as an option
- Improved installation features*
- Occupancy detection*
- Energy saving features*
- Improved occupant comfort
- Four fan speed settings including auto-fan
- Individual vane settings
- 2’ x 2’ size matches size of many ceiling tiles
- Corner-pocket design for simplified installation
- Built-in condensate lift mechanism designed to provide up to 33” of lift
- Ventilation air intake supported

*Requires a PAR-41MAAU controller

Specifications			System
Unit Type			PLFY-P05NFMU-ER1.TH
Cooling capacity (Nominal)[1]		BTU/H	5,000
Heating capacity (Nominal)[1]		BTU/H	5,600
Power source		Voltage, Phase, Hertz	208/230V, 1-phase, 60 Hz
Power Consumption	Cooling	kW	0.02
	Heating	kW	0.02
Current	Cooling	A	0.19
	Heating	A	0.14
MCA		A	0.24
Maximum Overcurrent Protection (MOCP)		A	15
External finish			Galvanized steel sheet
External Dimensions		In. [mm]	22-7/16 x 22-7/16 x 8-3/16 [570 x 570 x 208]
Net weight		Lbs [kg]	28.9 [13.1]
Heat exchanger			Cross fin (Aluminum fin and copper tube)
Fan	Type x quantity		Turbo fan x 1
	Airflow rate	CFM	230–265–280
	Motor type		DC motor
	Motor Output	kW	0.05
	Motor FLA	A	0.19
Sound pressure level (Measured in anechoic room)		dB(A)	26–28–30
Air filter			PP honeycomb fabric (long life type)
Refrigerant	Type		R410A
Diameter of refrigerant pipe (O.D.)	Liquid (High Pressure)	In. [mm]	1/4 [6.35] Flare
	Gas (Low Pressure)	In. [mm]	1/2 [12.7] Flare
Diameter of drain pipe		In. [mm]	O.D. 1-1/4 [32]

NOTES:
Cooling | Indoor: 81° F (27° C) DB / 66° F (19°C) WB; Outdoor 95° F (35° C) DB
Heating | Indoor: 68° F (20° C) DB; Outdoor 45° F (7° C) DB / 43° F (6° C) WB

© 2024 Mitsubishi Electric Trane HVAC US LLC. All rights reserved.

INDOOR UNIT ACCESSORIES: PLFY-P05NFMU-ER1.TH

Control Interface	Connector cable for remote display	☐ PAC-SA88HA-EP
	Deluxe Wired MA Remote Controller	☐ PAR-41MAAU
	IT Extender	☐ PAC-WHS01IE-E
	kumo station® for kumo cloud®	☐ PAC-WHS01HC-E
	Procon BACnet® and Modbus® Interface	☐ PAC-UKPRC001-CN-1
	Thermostat Interface	☐ PAC-US445CN-1
Remote Sensor	Flush Mount Remote Temperature Sensor	☐ PAC-USSEN002-FM-1
	Remote Temperature Sensor	☐ PAC-SE41TS-E
Terminal Signal Adapter	Terminal Signal Adapter	☐ PAC-IT51AD-E
	Terminal Signal Adapter	☐ PAC-IT52AD-E
Wired Remote Controller	Simple Ductless Wired Remote Controller	☐ PAC-SDW01RC-1
	Simple MA Remote Controller†	☐ PAC-YT53CRAU-J
	Smart ME Remote Controller - Backlit touchscreen	☐ PAR-U01MEDU-K
	Touch MA Controller†	☐ PAR-CT01MAU-SB
Wireless Remote Controller	kumo touch™ RedLINK™ Wireless Controller	☐ MHK2
	Wireless MA Receiver	☐ PAR-FA32MA-W
	Wireless MA Remote Controller	☐ PAR-FL32MA-E
	Wireless Remote Contoller	☐ PAR-SL101A-E
	Wireless Signal Receiver for PAR-SL101A-E	☐ PAR-SF9FA-E
	Wireless Signal Receiver Panel	☐ PAR-SR4LU-E
Condensate	Blue Diamond (Advanced) Mini Condensate Pump w/ Reservoir & Sensor (208/230V) [recommended]	☐ X87-721
	Blue Diamond (MicroBlue) Mini Condensate Pump (110/208/230V) up to 18,000 BTU/H	☐ X86-003
	Refco Condensate Pump (100-240 VAC) up to 120,000 BTU/H	☐ COMBI
Control Interface	CN24 Relay Kit	☐ CN24RELAY-KIT-CM3
	Remote Operation Adapter‡	☐ PAC-SF40RM-E
Grille	Grille	☐ SLP-18FAU
i-see Sensor® Panel	3D i-see Sensor® Corner Panel	☐ PAC-SF1ME-E
	Grille with 3D i-see Sensor®	☐ SLP-18FAEU

NOTES:
**High efficiency filter requires use of multi-function casement: PAC-SJ41TM-E

© 2024 Mitsubishi Electric Trane HVAC US LLC. All rights reserved.

INDOOR UNIT DIMENSIONS: PLFY-P05NFMU-ER1.TH

Unit: inch(mm)

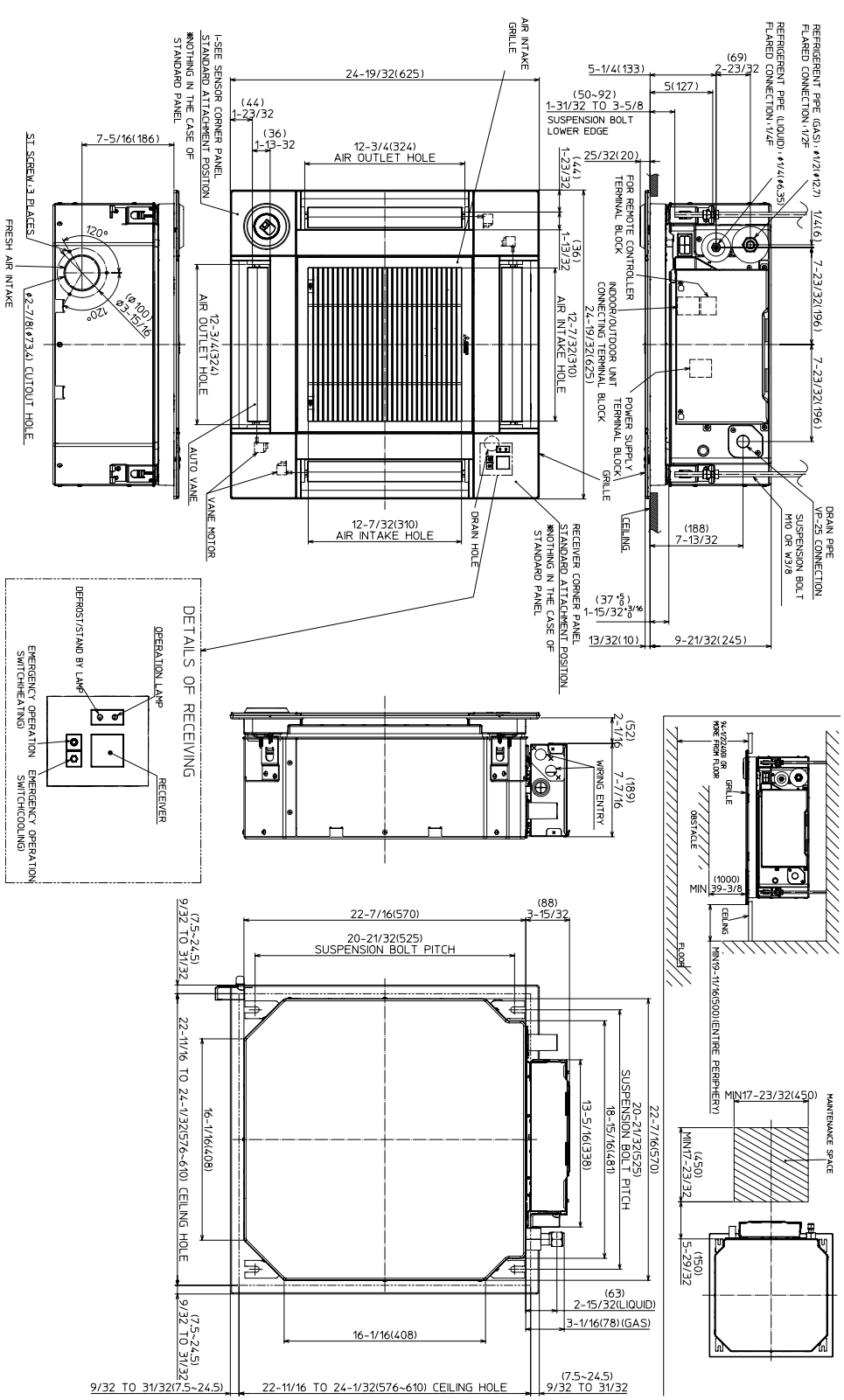

1340 Satellite Boulevard Suwanee, GA 30024
Toll Free: 800-433-4822 www.mehvac.com

FORM# PLFY-P05NFMU-ER1.TH - 202405

© 2024 Mitsubishi Electric Trane HVAC US LLC. All rights reserved.

CITYMULTI®

PLFY-P15NFMU-ER1.TH
15,000 BTU/H 22” X 22” 4-WAY CEILING CASSETTE

MITSUBISHI ELECTRIC
HEATING & AIR CONDITIONING

Job Name:
System Reference: Date:

GENERAL FEATURES
- Square edge, sleek design
- 3D i-see Sensor™ available as an option
- Improved installation features*
- Occupancy detection*
- Energy saving features*
- Improved occupant comfort
- Four fan speed settings including auto-fan
- Individual vane settings
- 2’ x 2’ size matches size of many ceiling tiles
- Corner-pocket design for simplified installation
- Built-in condensate lift mechanism designed to provide up to 33” of lift
- Ventilation air intake supported
- Requires a PAR-41MAAU controller

Specifications			System
Unit Type			PLFY-P15NFMU-ER1.TH
Cooling capacity (Nominal)[1]		BTU/H	15,000
Heating capacity (Nominal)[1]		BTU/H	17,000
Power source		Voltage, Phase, Hertz	208/230V, 1-phase, 60 Hz
Power Consumption	Cooling	kW	0.03
	Heating	kW	0.03
Current	Cooling	A	0.28
	Heating	A	0.23
MCA		A	0.35
Maximum Overcurrent Protection (MOCP)		A	15
External finish			Galvanized steel sheet
External Dimensions		In. [mm]	22-7/16 x 22-7/16 x 8-3/16 [570 x 570 x 208]
Net weight		Lbs [kg]	31.3 [14.2]
Heat exchanger			Cross fin (Aluminum fin and copper tube)
Fan	Type x quantity		Turbo fan x 1
	Airflow rate	CFM	265–315–390
	Motor type		DC motor
	Motor Output	kW	0.05
	Motor FLA	A	0.28
Sound pressure level (Measured in anechoic room)		dB(A)	28–33–39
Air filter			PP honeycomb fabric (long life type)
Refrigerant	Type		R410A
Diameter of refrigerant pipe (O.D.)	Liquid (High Pressure)	In. [mm]	1/4 [6.35] Flare
	Gas (Low Pressure)	In. [mm]	1/2 [12.7] Flare
Diameter of drain pipe		In. [mm]	O.D. 1-1/4 [32]

NOTES:
Cooling | Indoor: 81° F (27° C) DB / 66° F (19°C) WB; Outdoor 95° F (35° C) DB
Heating | Indoor: 68° F (20° C) DB; Outdoor 45° F (7° C) DB / 43° F (6° C) WB

© 2024 Mitsubishi Electric Trane HVAC US LLC. All rights reserved.

INDOOR UNIT ACCESSORIES: PLFY-P15NFMU-ER1.TH

Control Interface	Connector cable for remote display	☐ PAC-SA88HA-EP
	Deluxe Wired MA Remote Controller	☐ PAR-41MAAU
	IT Extender	☐ PAC-WHS01IE-E
	kumo station® for kumo cloud®	☐ PAC-WHS01HC-E
	Procon BACnet® and Modbus® Interface	☐ PAC-UKPRC001-CN-1
	Thermostat Interface	☐ PAC-US445CN-1
Remote Sensor	Remote Temperature Sensor	☐ PAC-SE41TS-E
Terminal Signal Adapter	Terminal Signal Adapter	☐ PAC-IT51AD-E
	Terminal Signal Adapter	☐ PAC-IT52AD-E
Wired Remote Controller	Simple Ductless Wired Remote Controller	☐ PAC-SDW01RC-1
	Simple MA Remote Controller†	☐ PAC-YT53CRAU-J
	Smart ME Remote Controller - Backlit touchscreen	☐ PAR-U01MEDU-K
	Touch MA Controller†	☐ PAR-CT01MAU-SB
Wireless Remote Controller	kumo touch™ RedLINK™ Wireless Controller	☐ MHK2
	Wireless MA Receiver	☐ PAR-FA32MA-W
	Wireless MA Remote Controller	☐ PAR-FL32MA-E
	Wireless Remote Contoller	☐ PAR-SL101A-E
	Wireless Signal Receiver for PAR-SL101A-E	☐ PAR-SF9FA-E
	Wireless Signal Receiver Panel	☐ PAR-SR4LU-E
Condensate	Blue Diamond (Advanced) Mini Condensate Pump w/ Reservoir & Sensor (208/230V) [recommended]	☐ X87-721
	Blue Diamond (MicroBlue) Mini Condensate Pump (110/208/230V) up to 18,000 BTU/H	☐ X86-003
	Refco Condensate Pump (100-240 VAC) up to 120,000 BTU/H	☐ COMBI
Control Interface	CN24 Relay Kit	☐ CN24RELAY-KIT-CM3
	Remote Operation Adapter‡	☐ PAC-SF40RM-E
i-see Sensor® Panel	3D i-see Sensor® Corner Panel	☐ PAC-SF1ME-E
	Grille with 3D i-see Sensor®	☐ SLP-18FAEU

NOTES:
**High efficiency filter requires use of multi-function casement: PAC-SJ41TM-E

© 2024 Mitsubishi Electric Trane HVAC US LLC. All rights reserved.

INDOOR UNIT DIMENSIONS: PLFY-P15NFMU-ER1.TH

Unit: inch(mm)

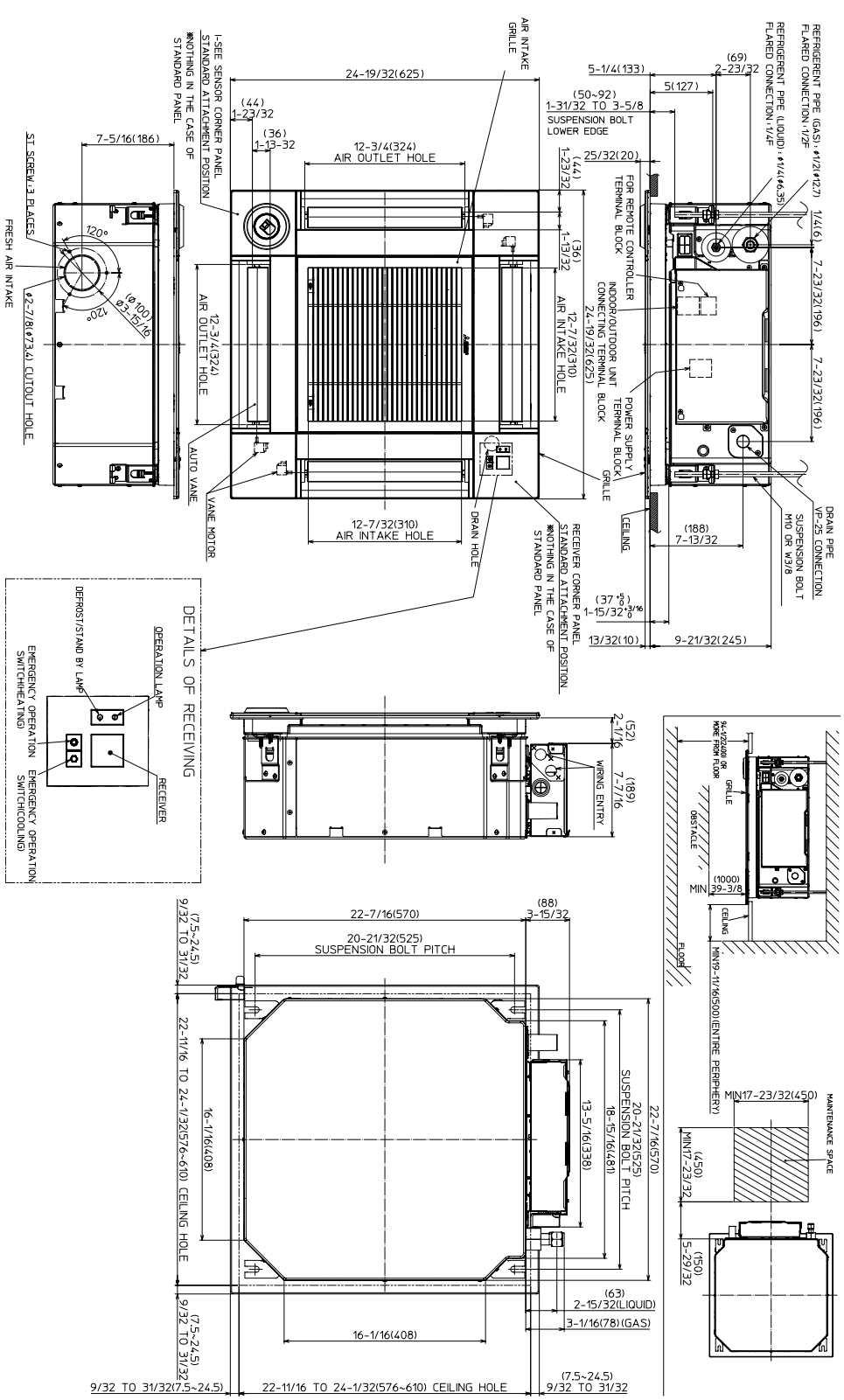

1340 Satellite Boulevard Suwanee, GA 30024
Toll Free: 800-433-4822 www.mehvac.com

Specifications are subject to change without notice.

© 2024 Mitsubishi Electric Trane HVAC US LLC. All rights reserved.

PLFY-P18NFMU-ER1.TH
18,000 BTU/H 22” X 22” 4-WAY CEILING CASSETTE

Job Name:
System Reference: Date:

GENERAL FEATURES
- Square edge, sleek design
- 3D i-see Sensor™ available as an option
- Improved installation features*
- Occupancy detection*
- Energy saving features*
- Improved occupant comfort
- Four fan speed settings including auto-fan
- Individual vane settings
- 2’ x 2’ size matches size of many ceiling tiles
- Corner-pocket design for simplified installation
- Built-in condensate lift mechanism designed to provide up to 33” of lift
- Ventilation air intake supported
- Requires a PAR-41MAAU controller

Specifications			System
Unit Type			PLFY-P18NFMU-ER1.TH
Cooling capacity (Nominal)[1]		BTU/H	18,000
Heating capacity (Nominal)[1]		BTU/H	20,000
Power source		Voltage, Phase, Hertz	208/230V, 1-phase, 60 Hz
Power Consumption	Cooling	kW	0.04
	Heating	kW	0.04
Current	Cooling	A	0.4
	Heating	A	0.35
MCA		A	0.5
Maximum Overcurrent Protection (MOCP)		A	15
External finish			Galvanized steel sheet
External Dimensions		In. [mm]	22-7/16 x 22-7/16 x 8-3/16 [570 x 570 x 208]
Net weight		Lbs [kg]	31.3 [14.2]
Heat exchanger			Cross fin (Aluminum fin and copper tube)
Fan	Type x quantity		Turbo fan x 1
	Airflow rate	CFM	315–390–460
	Motor type		DC motor
	Motor Output	kW	0.05
	Motor FLA	A	0.4
Sound pressure level (Measured in anechoic room)		dB(A)	33–39–43
Air filter			PP honeycomb fabric (long life type)
Refrigerant	Type		R410A
Diameter of refrigerant pipe (O.D.)	Liquid (High Pressure)	In. [mm]	1/4 [6.35] Flare
	Gas (Low Pressure)	In. [mm]	1/2 [12.7] Flare
Diameter of drain pipe		In. [mm]	O.D. 1-1/4 [32]

NOTES:
Cooling | Indoor: 81° F (27° C) DB / 66° F (19°C) WB; Outdoor 95° F (35° C) DB
Heating | Indoor: 68° F (20° C) DB; Outdoor 45° F (7° C) DB / 43° F (6° C) WB

© 2024 Mitsubishi Electric Trane HVAC US LLC. All rights reserved.

INDOOR UNIT ACCESSORIES: PLFY-P18NFMU-ER1.TH

Control Interface	Connector cable for remote display	☐ PAC-SA88HA-EP
	Deluxe Wired MA Remote Controller	☐ PAR-41MAAU
	IT Extender	☐ PAC-WHS01IE-E
	kumo station® for kumo cloud®	☐ PAC-WHS01HC-E
	Procon BACnet® and Modbus® Interface	☐ PAC-UKPRC001-CN-1
	Thermostat Interface	☐ PAC-US445CN-1
Remote Sensor	Remote Temperature Sensor	☐ PAC-SE41TS-E
Terminal Signal Adapter	Terminal Signal Adapter	☐ PAC-IT51AD-E
	Terminal Signal Adapter	☐ PAC-IT52AD-E
Wired Remote Controller	Simple Ductless Wired Remote Controller	☐ PAC-SDW01RC-1
	Simple MA Remote Controller†	☐ PAC-YT53CRAU-J
	Smart ME Remote Controller - Backlit touchscreen	☐ PAR-U01MEDU-K
	Touch MA Controller†	☐ PAR-CT01MAU-SB
Wireless Remote Controller	kumo touch™ RedLINK™ Wireless Controller	☐ MHK2
	Wireless MA Receiver	☐ PAR-FA32MA-W
	Wireless MA Remote Controller	☐ PAR-FL32MA-E
	Wireless Remote Contoller	☐ PAR-SL101A-E
	Wireless Signal Receiver for PAR-SL101A-E	☐ PAR-SF9FA-E
	Wireless Signal Receiver Panel	☐ PAR-SR4LU-E
Condensate	Blue Diamond (Advanced) Mini Condensate Pump w/ Reservoir & Sensor (208/230V) [recommended]	☐ X87-721
	Blue Diamond (MicroBlue) Mini Condensate Pump (110/208/230V) up to 18,000 BTU/H	☐ X86-003
	Refco Condensate Pump (100-240 VAC) up to 120,000 BTU/H	☐ COMBI
Control Interface	CN24 Relay Kit	☐ CN24RELAY-KIT-CM3
	Remote Operation Adapter‡	☐ PAC-SF40RM-E
i-see Sensor® Panel	3D i-see Sensor® Corner Panel	☐ PAC-SF1ME-E
	Grille with 3D i-see Sensor®	☐ SLP-18FAEU

NOTES:
**High efficiency filter requires use of multi-function casement: PAC-SJ41TM-E

© 2024 Mitsubishi Electric Trane HVAC US LLC. All rights reserved.

INDOOR UNIT DIMENSIONS: PLFY-P18NFMU-ER1.TH

Unit: inch(mm)

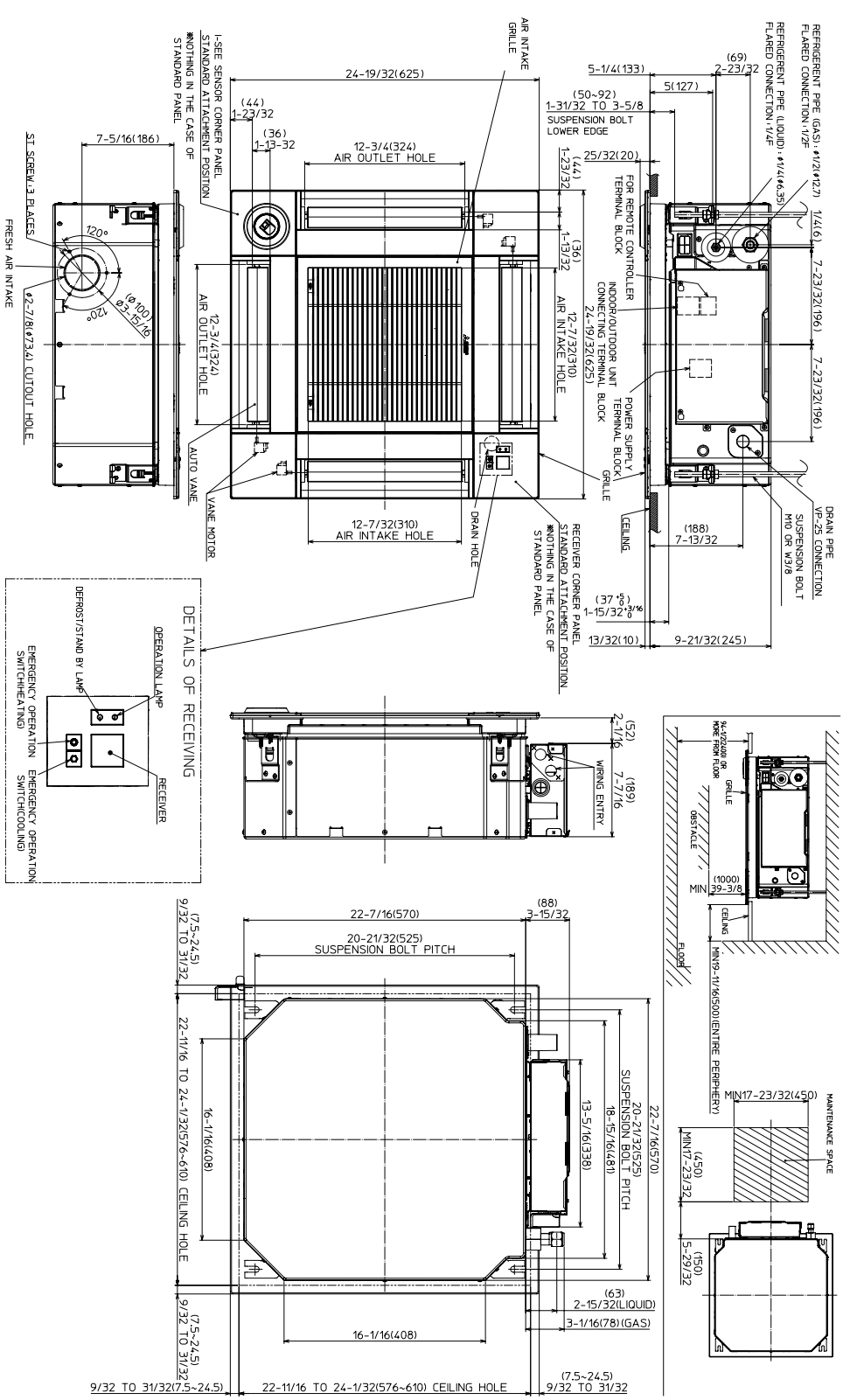

1340 Satellite Boulevard Suwanee, GA 30024
Toll Free: 800-433-4822 www.mehvac.com

Specifications are subject to change without notice.

© 2024 Mitsubishi Electric Trane HVAC US LLC. All rights reserved.

CITYMULTI®

PLFY-P12NFMU-ER1.TH
12,000 BTU/H 22” X 22” 4-WAY CEILING CASSETTE

MITSUBISHI ELECTRIC
HEATING & AIR CONDITIONING

Job Name:
System Reference: Date:

GENERAL FEATURES
- Square edge, sleek design
- 3D i-see Sensor™ available as an option
- Improved installation features*
- Occupancy detection*
- Energy saving features*
- Improved occupant comfort
- Four fan speed settings including auto-fan
- Individual vane settings
- 2’ x 2’ size matches size of many ceiling tiles
- Corner-pocket design for simplified installation
- Built-in condensate lift mechanism designed to provide up to 33” of lift
- Ventilation air intake supported

*Requires a PAR-41MAAU controller

Specifications			System
Unit Type			PLFY-P12NFMU-ER1.TH
Cooling capacity (Nominal)[1]		BTU/H	12,000
Heating capacity (Nominal)[1]		BTU/H	13,500
Power source		Voltage, Phase, Hertz	208/230V, 1-phase, 60 Hz
Power Consumption	Cooling	kW	0.02
	Heating	kW	0.02
Current	Cooling	A	0.23
	Heating	A	0.18
MCA		A	0.29
Maximum Overcurrent Protection (MOCP)		A	15
External finish			Galvanized steel sheet
External Dimensions		In. [mm]	22-7/16 x 22-7/16 x 8-3/16 [570 x 570 x 208]
Net weight		Lbs [kg]	31.3 [14.2]
Heat exchanger			Cross fin (Aluminum fin and copper tube)
Fan	Type x quantity		Turbo fan x 1
	Airflow rate	CFM	245–280–335
	Motor type		DC motor
	Motor Output	kW	0.05
	Motor FLA	A	0.23
Sound pressure level (Measured in anechoic room)		dB(A)	26–30–34
Air filter			PP honeycomb fabric (long life type)
Refrigerant	Type		R410A
Diameter of refrigerant pipe (O.D.)	Liquid (High Pressure)	In. [mm]	1/4 [6.35] Flare
	Gas (Low Pressure)	In. [mm]	1/2 [12.7] Flare
Diameter of drain pipe		In. [mm]	O.D. 1-1/4 [32]

NOTES:
Cooling | Indoor: 81° F (27° C) DB / 66° F (19°C) WB; Outdoor 95° F (35° C) DB
Heating | Indoor: 68° F (20° C) DB; Outdoor 45° F (7° C) DB / 43° F (6° C) WB

© 2024 Mitsubishi Electric Trane HVAC US LLC. All rights reserved.

INDOOR UNIT ACCESSORIES: PLFY-P12NFMU-ER1.TH

Control Interface	Connector cable for remote display	☐ PAC-SA88HA-EP
	Deluxe Wired MA Remote Controller	☐ PAR-41MAAU
	IT Extender	☐ PAC-WHS01IE-E
	kumo station® for kumo cloud®	☐ PAC-WHS01HC-E
	Procon BACnet® and Modbus® Interface	☐ PAC-UKPRC001-CN-1
	Thermostat Interface	☐ PAC-US445CN-1
Remote Sensor	Remote Temperature Sensor	☐ PAC-SE41TS-E
Terminal Signal Adapter	Terminal Signal Adapter	☐ PAC-IT51AD-E
	Terminal Signal Adapter	☐ PAC-IT52AD-E
Wired Remote Controller	Simple Ductless Wired Remote Controller	☐ PAC-SDW01RC-1
	Simple MA Remote Controller†	☐ PAC-YT53CRAU-J
	Smart ME Remote Controller - Backlit touchscreen	☐ PAR-U01MEDU-K
	Touch MA Controller†	☐ PAR-CT01MAU-SB
Wireless Remote Controller	kumo touch™ RedLINK™ Wireless Controller	☐ MHK2
	Wireless MA Receiver	☐ PAR-FA32MA-W
	Wireless MA Remote Controller	☐ PAR-FL32MA-E
	Wireless Remote Contoller	☐ PAR-SL101A-E
	Wireless Signal Receiver for PAR-SL101A-E	☐ PAR-SF9FA-E
	Wireless Signal Receiver Panel	☐ PAR-SR4LU-E
Condensate	Blue Diamond (Advanced) Mini Condensate Pump w/ Reservoir & Sensor (208/230V) [recommended]	☐ X87-721
	Blue Diamond (MicroBlue) Mini Condensate Pump (110/208/230V) up to 18,000 BTU/H	☐ X86-003
	Refco Condensate Pump (100-240 VAC) up to 120,000 BTU/H	☐ COMBI
Control Interface	CN24 Relay Kit	☐ CN24RELAY-KIT-CM3
	Remote Operation Adapter‡	☐ PAC-SF40RM-E
i-see Sensor® Panel	3D i-see Sensor® Corner Panel	☐ PAC-SF1ME-E
	Grille with 3D i-see Sensor®	☐ SLP-18FAEU

NOTES:
**High efficiency filter requires use of multi-function casement: PAC-SJ41TM-E

© 2024 Mitsubishi Electric Trane HVAC US LLC. All rights reserved.

INDOOR UNIT DIMENSIONS: PLFY-P12NFMU-ER1.TH

Unit: inch(mm)

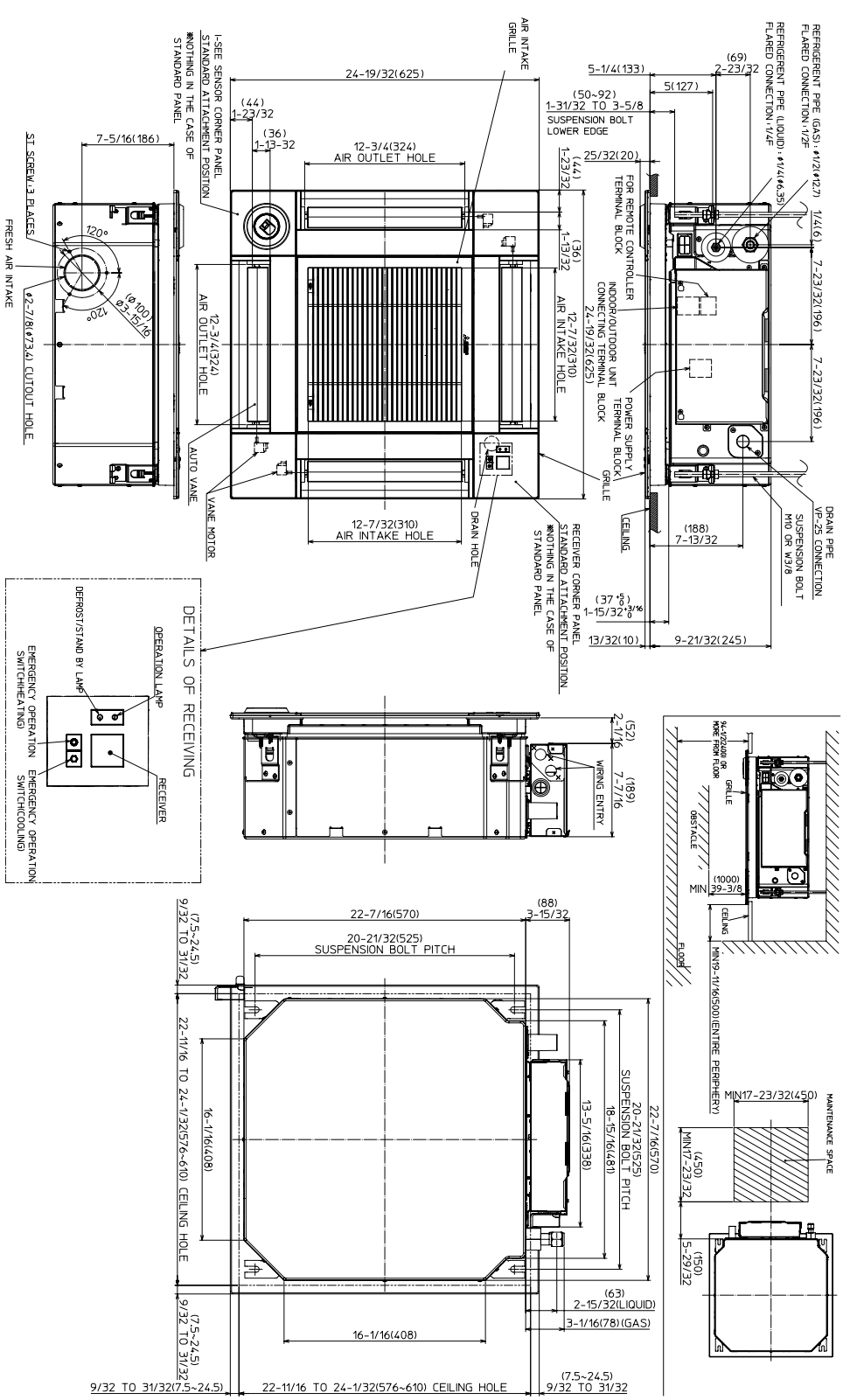

1340 Satellite Boulevard Suwanee, GA 30024
Toll Free: 800-433-4822 www.mehvac.com

FORM# PLFY-P12NFMU-ER1.TH - 202405

© 2024 Mitsubishi Electric Trane HVAC US LLC. All rights reserved.

PEFY-P54NMAU-E4
54,000 BTU/H MEDIUM STATIC DUCTED

Job Name:
System Reference: Date:

GENERAL FEATURES
- Dual set point functionality
- Multiple fan speed settings
- Auto fan mode
- 9-7/8” (250mm) high for low ceiling heights
- Built-in condensate lift; lifts to 27-9/16” (700 mm)
- Ducted fan coil supporting multiple configurations for flexible installation

Specifications			System
Unit Type			PEFY-P54NMAU-E4
Cooling capacity (Nominal)[1]		BTU/H	54,000
Heating capacity (Nominal)[1]		BTU/H	60,000
Power source		Voltage, Phase, Hertz	208/230V, 1-phase, 60 Hz
Power Consumption	Cooling	kW	0.252
	Heating	kW	0.25
Current	Cooling	A	2.29/2.07
	Heating	A	2.29/2.07
MCA		A	4.38
Maximum Overcurrent Protection (MOCP)		A	15
External finish			Galvanized steel sheet
External Dimensions		In. [mm]	63 x 28-7/8 x 9-7/8 [1,600 x 732 x 250]
Net weight		Lbs [kg]	91 [41]
Heat exchanger			Cross fin (Aluminum fin and copper tube)
Fan	Type x quantity		Sirocco fan x 3
	External Static pressure	in.WG	0.14, 0.2, 0.28, 0.4, 0.6 factory set to 0.2 In. WG
	Airflow rate	CFM	989–1,201–1,413
	Motor type		DC Motor
	Motor Output	kW	0.3
	Motor FLA	A	3.5
Sound pressure level (Measured in anechoic room)		dB(A)	24–28–42
Air filter			PP Honeycomb fabric
Refrigerant	Type		R410A
Diameter of refrigerant pipe (O.D.)	Liquid (High Pressure)	In. [mm]	3/8 [9.52] Brazed
	Gas (Low Pressure)	In. [mm]	5/8 [15.88] Brazed
Diameter of drain pipe		In. [mm]	O.D. 1-1/4 [32]

NOTES:
[1]Cooling / Heating capacity indicated at the maximum value at operation under the following conditions:
Cooling | Indoor: 80° F (26.7° C) DB / 67° F (19.4° C) WB; Outdoor 95° F (35° C) DB
Heating | Indoor: 70° F (21.1° C) DB; Outdoor 47° F (8.3° C) DB / 43° F (6.1° C) WB

© 2022 Mitsubishi Electric Trane HVAC US LLC. All rights reserved.

INDOOR UNIT ACCESSORIES: PEFY-P54NMAU-E4

Control Interface	3-Pin Connector	☐ PAC-715AD
	BACnet® and Modbus® Interface	☐ PAC-UKPRC001-CN-1
	CN24 Relay Kit	☐ CN24RELAY-KIT-CM3
	Connector and wire for Operation status/error using CN51	☐ PAC-725AD
	IT Extender	☐ PAC-WHS01IE-E
	kumo station® for kumo cloud®	☐ PAC-WHS01HC-E
	Thermostat Interface	☐ PAC-US444CN-1
	Thermostat Interface	☐ PAC-US445CN-1
	Wireless Interface for kumo cloud®	☐ PAC-USWHS002-WF-2
Remote Sensor	Flush Mount Remote Temperature Sensor	☐ PAC-USSEN002-FM-1
	Flush Mount Temperature Sensor	☐ PAC-USSEN001-FM-1
	Remote Temperature Sensor	☐ PAC-SE41TS-E
	Wireless temperature and humitity sensor for kumo cloud®	☐ PAC-USWHS003-TH-1
Terminal Signal Adapter	Terminal Signal Adapter	☐ PAC-IT51AD-E
Wired Remote Controller	Deluxe Wired MA Remote Controller†	☐ PAR-40MAAU
	Simple MA Remote Controller†	☐ PAC-YT53CRAU-J
	Smart ME Remote Controller - Backlit touchscreen	☐ PAR-U01MEDU-K
	Touch MA Controller†	☐ PAR-CT01MAU-SB
Wireless Remote Controller	kumo touch™ RedLINK™ Wireless Controller	☐ MHK2
	Wireless MA Receiver	☐ PAR-FA32MA-W
	Wireless MA Remote Controller	☐ PAR-FL32MA-E
Condensate	Blue Diamond (Advanced) Mini Condensate Pump w/ Reservoir & Sensor (208/230V) [recommended]	☐ X87-721
	Blue Diamond (MegaBlue Advanced) Condensate Pump w/ Reservoir & Sensor	☐ X87-835
	Blue Diamond MultiTank — collection tank for use with multiple pumps	☐ C21-014
	Blue Diamond Sensor Extension Cable — 15 Ft.	☐ C13-103
	Refco Condensate Pump (100-240 VAC) up to 120,000 BTU/H	☐ COMBI
	Sauermann Condensate Pump	☐ SI30-230
Filter Box	Filter Box with MERV 13 Filter	☐ FBM2-5-A
Lineset	10’ x 3/8” x 10’ x 5/8” Lineset (Twin-Tube Insulation)††	☐ MPLS385812T-10
	100’ x 3/8” x 100’ x 5/8” Lineset (Twin-Tube Insulation)††	☐ MPLS385812T-100
	15’ x 3/8” x 15’ x 5/8” Lineset (Twin-Tube Insulation)††	☐ MPLS385812T-15
	30’ x 3/8” x 30’ x 5/8” Lineset (Twin-Tube Insulation)††	☐ MPLS385812T-30
	50’ x 3/8” x 50’ x 5/8” Lineset (Twin-Tube Insulation)††	☐ MPLS385812T-50
	65’ x 3/8” x 65’ x 5/8” Lineset (Twin-Tube Insulation)††	☐ MPLS385812T-65

© 2022 Mitsubishi Electric Trane HVAC US LLC. All rights reserved.

INDOOR UNIT DIMENSIONS: PEFY-P54NMAU-E4

Unit : mm(in.)

Note
1. Use an M10 screw for the suspension bolt (field supply).
2. Keep the service space for maintenance at the bottom.
3. This drawing is for PEFY-P24·27·30NMAU-E4 models, which have 2 fans. PEFY-P06·08·12NMAU-E4 models have 2 fans. PEFY-P15·18NMAU-E4 models have 1 fan. PEFY-P36·48·54NMAU-E4 models have 3 fans.
4. If the inlet duct is used, remove the air filter (supplied with the unit), then install the filter (field supply) at the suction side.
5. Heat air to 0°C (32°F) or higher when taking fresh air with a fresh air intake.

Unit:mm(in.)

Model	① Gas pipe	② Liquid pipe
PEFY-P06,08,12NMAU-E4	Ø12.7 (1/2)	Ø6.35 (1/4)
PEFY-P15,18NMAU-E4		
PEFY-P24,27,30NMAU-E4	Ø15.88 (5/8)	Ø9.52 (3/8)
PEFY-P36,48NMAU-E4		
PEFY-P54NMAU-E4		

Unit:mm(in.)

Model	A	B	C	D	E	F	G
PEFY-P06,08,12NMAU-E4	700 (27-9/16)	754 (29-11/16)	800 (31-1/2)	660 (26)	7	600 (23-5/8)	658 (25-15/16)
PEFY-P15,18NMAU-E4	900 (35-7/16)	954 (37-9/16)	1000 (39-3/8)	860 (33-7/8)	9	800 (31-1/2)	858 (33-13/16)
PEFY-P24,27,30NMAU-E4	1100 (43-5/16)	1154 (45-7/16)	1200 (47-1/4)	1060 (41-3/4)	11	1000 (39-3/8)	1058 (41-11/16)
PEFY-P36,48NMAU-E4	1400 (55-1/8)	1454 (57-1/4)	1500 (59-1/16)	1360 (53-9/16)	14	1300 (51-3/16)	1358 (53-1/2)
PEFY-P54NMAU-E4	1600 (63)	1654 (65-1/8)	1700 (66-15/16)	1560 (61-7/16)	16	1500 (59-1/16)	1558 (61-3/8)

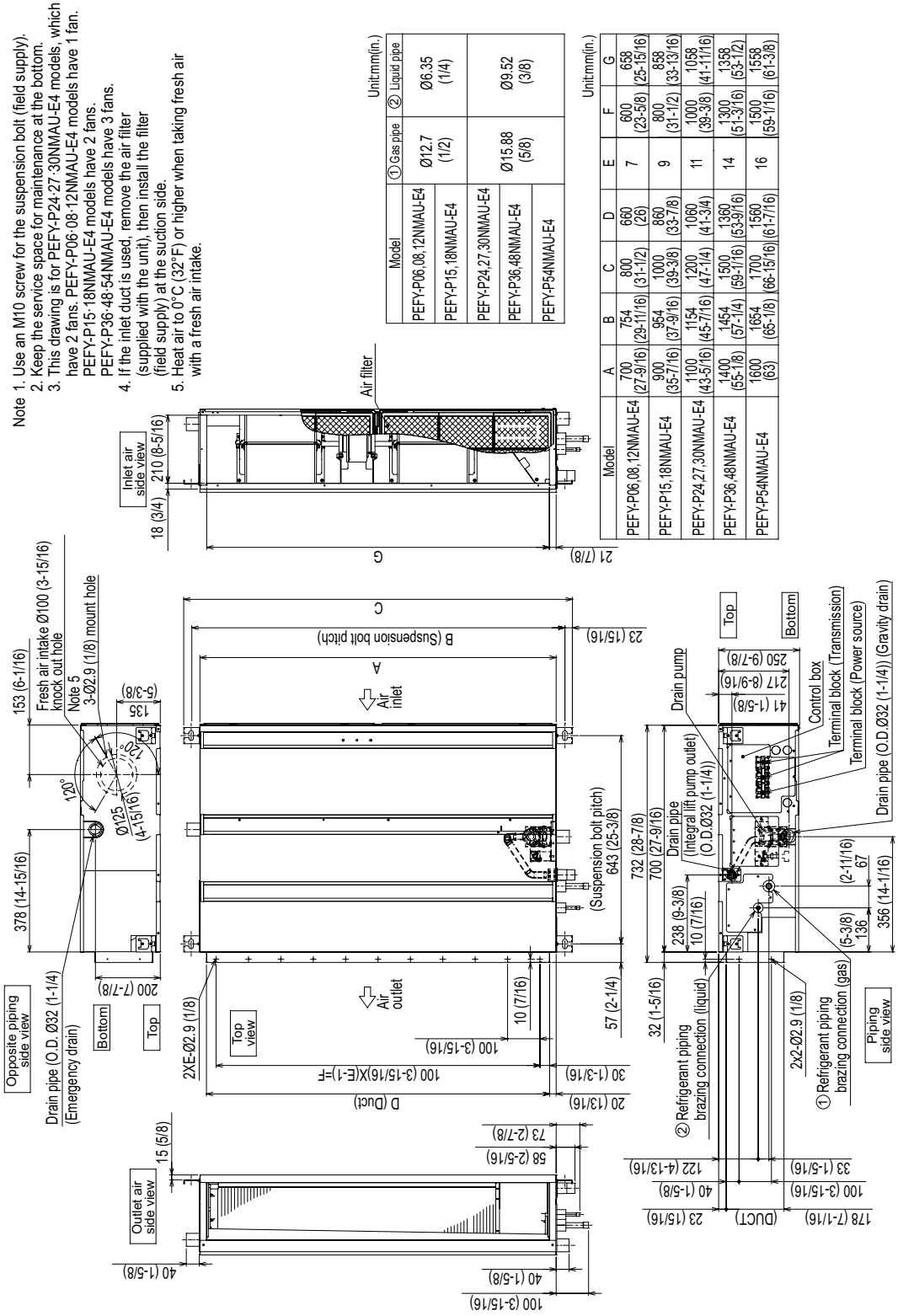

1340 Satellite Boulevard Suwanee, GA 30024
Toll Free: 800-433-4822 www.mehvac.com

FORM# PEFY-P54NMAU-E4 - 202211

© 2022 Mitsubishi Electric Trane HVAC US LLC. All rights reserved.

CITYMULTI®

PLFY-P05NFMU-E
5,000 BTU/H 22” X 22” 4-WAY CEILING CASSETTE

MITSUBISHI ELECTRIC
HEATING & AIR CONDITIONING

Job Name:
System Reference: Date:

GENERAL FEATURES
- Square edge, sleek design
- 3D i-see Sensor™ available as an option
- Improved installation features*
- Occupancy detection*
- Energy saving features*
- Improved occupant comfort
- Four fan speed settings including auto-fan
- Individual vane settings
- 2’ x 2’ size matches size of many ceiling tiles
- Corner-pocket design for simplified installation
- Built-in condensate lift mechanism designed to provide up to 33” of lift
- Ventilation air intake supported

*Requires a PAR-33MAA-J controller

Specifications			System
Unit Type			PLFY-P05NFMU-E
Cooling capacity (Nominal)[1]		BTU/H	5,000
Heating capacity (Nominal)[1]		BTU/H	5,600
Power source		Voltage, Phase, Hertz	208/230V, 1-phase, 60 Hz
Power Consumption	Cooling	kW	0.02
	Heating	kW	0.02
Current	Cooling	A	0.19
	Heating	A	0.14
MCA		A	0.24
Maximum Overcurrent Protection (MOCP)		A	15
External finish			Galvanized steel sheet
External Dimensions		In. [mm]	22-7/16 x 22-7/16 x 8-3/16 [570 x 570 x 208]
Net weight		Lbs [kg]	28.9 [13.1]
Heat exchanger			Cross fin (Aluminum fin and copper tube)
Fan	Type x quantity		Turbo fan x 1
	Airflow rate	CFM	230–265–280
	Motor type		DC motor
	Motor Output	kW	0.05
	Motor FLA	A	0.19
Sound pressure level (Measured in anechoic room)		dB(A)	26–28–30
Air filter			PP honeycomb fabric (long life type)
Refrigerant	Type		R410A
Diameter of refrigerant pipe (O.D.)	Liquid (High Pressure)	In. [mm]	1/4 [6.35] Flare
	Gas (Low Pressure)	In. [mm]	1/2 [12.7] Flare
Diameter of drain pipe		In. [mm]	O.D. 1-1/4 [32]

NOTES:
[1]Cooling / Heating capacity indicated at the maximum value at operation under the following conditions:
Cooling | Indoor: 80° F (26.7° C) DB / 67° F (19.4° C) WB; Outdoor 95° F (35° C) DB
Heating | Indoor: 70° F (21.1° C) DB; Outdoor 47° F (8.3° C) DB / 43° F (6.1° C) WB

© 2023 Mitsubishi Electric Trane HVAC US LLC. All rights reserved.

INDOOR UNIT ACCESSORIES: PLFY-P05NFMU-E

Control Interface	Connector cable for remote display	☐ PAC-SA88HA-EP
	IT Extender	☐ PAC-WHS01IE-E
	kumo station® for kumo cloud®	☐ PAC-WHS01HC-E
	Procon BACnet® and Modbus® Interface	☐ PAC-UKPRC001-CN-1
	Thermostat Interface	☐ PAC-US444CN-1
	Thermostat Interface	☐ PAC-US445CN-1
Remote Sensor	Flush Mount Remote Temperature Sensor	☐ PAC-USSEN002-FM-1
	Flush Mount Temperature Sensor	☐ PAC-USSEN001-FM-1
	Remote Temperature Sensor	☐ PAC-SE41TS-E
Terminal Signal Adapter	Terminal Signal Adapter	☐ PAC-IT51AD-E
	Terminal Signal Adapter	☐ PAC-IT52AD-E
Wired Remote Controller	Deluxe Wired MA Remote Controller†	☐ PAR-40MAAU
	Simple Ductless Wired Remote Controller	☐ PAC-SDW01RC-1
	Simple MA Remote Controller†	☐ PAC-YT53CRAU-J
	Smart ME Remote Controller - Backlit touchscreen	☐ PAR-U01MEDU-K
	Touch MA Controller†	☐ PAR-CT01MAU-SB
Wireless Remote Controller	kumo touch™ RedLINK™ Wireless Controller	☐ MHK2
	Wireless MA Receiver	☐ PAR-FA32MA-W
	Wireless MA Remote Controller	☐ PAR-FL32MA-E
	Wireless Receiver	☐ PAR-SF9FA-E
	Wireless Remote Contoller	☐ PAR-SL101A-E
	Wireless Signal Receiver Panel	☐ PAR-SR4LU-E
Condensate	Blue Diamond (Advanced) Mini Condensate Pump w/ Reservoir & Sensor (208/230V) [recommended]	☐ X87-721
	Blue Diamond (MicroBlue) Mini Condensate Pump (110/208/230V) up to 18,000 BTU/H	☐ X86-003
	Refco Condensate Pump (100-240 VAC) up to 120,000 BTU/H	☐ COMBI
Control Interface	CN24 Relay Kit	☐ CN24RELAY-KIT-CM3
	Remote Operation Adapter‡	☐ PAC-SF40RM-E
Grille	Grille	☐ SLP-18FAU
i-see Sensor® Panel	3D i-see Sensor® Corner Panel	☐ PAC-SF1ME-E
	Grille with 3D i-see Sensor®	☐ SLP-18FAEU

NOTES:
**High efficiency filter requires use of multi-function casement: PAC-SJ41TM-E

© 2023 Mitsubishi Electric Trane HVAC US LLC. All rights reserved.

INDOOR UNIT DIMENSIONS: PLFY-P05NFMU-E

Unit: inch

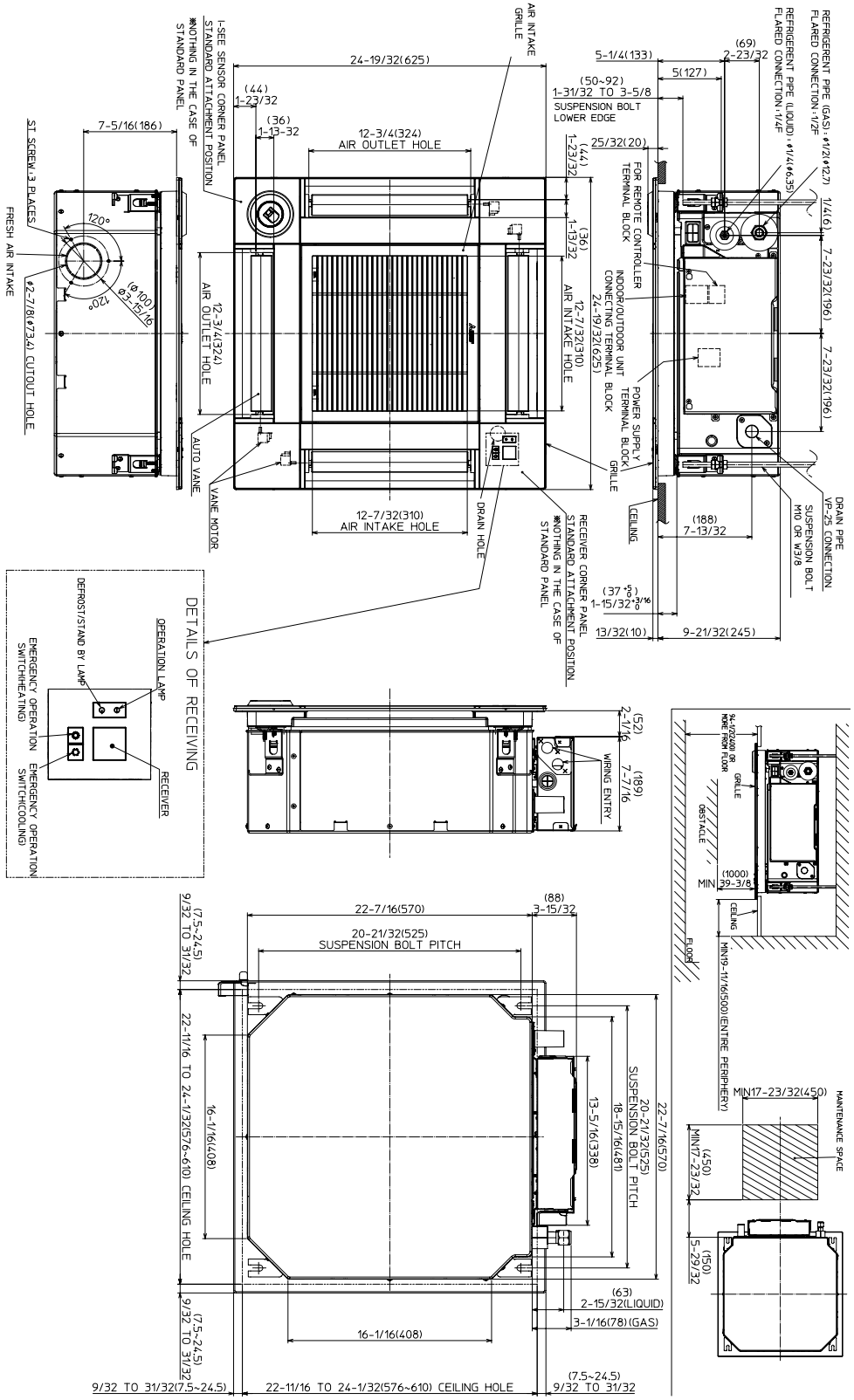

1340 Satellite Boulevard Suwanee, GA 30024
Toll Free: 800-433-4822 www.mehvac.com

FORM# PLFY-P05NFMU-E - 202309

© 2023 Mitsubishi Electric Trane HVAC US LLC. All rights reserved.

CMB-P108NU-J1
8 BRANCH (SINGLE BC)

Job Name:

System Reference: Date:

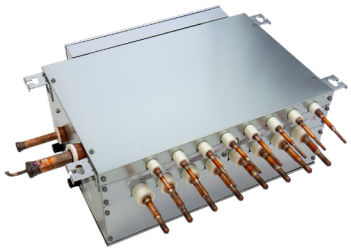

Specifications			System
Unit Type			CMB-P108NU-J1
Indoor Unit Capacity Connectable to 1 Branch		BTU/H	54,000
Number Of Branches			8
Electrical Power Requirements			208/230V, 1-phase, 60 Hz
Minimum Circuit Ampacity (MCA)		A	0.7/0.9
Maximum Overcurrent Protection (MOCP)		A	20
Power Input (208 / 230V)	Cooling	kW	0.59 / 0.69
Power Input (208/230V)	Heating	kW	0.30 / 0.35/
Current Input (208/230V)	Cooling	A	0.122 / 0.157/
	Heating	A	0.061 / 0.078
External Dimensions		In. [mm]	9-7/8 x 23-1/2 x 15-11/16 [250 x 596 x 398]
Net Weight		Lbs. [kg]	64 [29]
External finish			Galvanized steel plate (Lower part drain pan: Pre-coated galvanized sheets + powder coating) ()
Connectable Outdoor / Heat Source Unit Capacity			72,000 to 120,000
Field drain pipe size		In. [mm]	3/4 NPT
Refrigerant			R410A
Sound power level (measured in anechoic room)	Defrost	dB(A)	40
Sound pressure level (measured in anechoic room)	Rated operation	dB(A)	59.0
	Defrost	dB(A)	71

NOTES:
1. The equipment is for use with R410A refrigerant only.
2. When possible, avoid installing the BC controller within 15 Ft. of sound sensitive areas.
3. Rated operation sound data is based on cooling mode. Sound data may vary depending on outdoor unit capacity and operation mode.
4. Sound pressure/power levels obtained via testing in an anechoic chamber. Actual sound pressure levels may be greater due to ambient noise and/or deflection
5. Sound pressure values were obtained at a test location approximately 5 Ft. from the unit
6. The solenoid valve switching sound pressure value is 56 dB(A) for all units
7. The unit is intended for installation in an indoor environment only
8. For details regarding installation specifics, please refer to the product's Installation Manual.

© 2022 Mitsubishi Electric Trane HVAC US LLC. All rights reserved.

INDOOR UNIT ACCESSORIES: CMB-P108NU-J1

Ball Valve	Ball Valve (3/8” SAE Brazed)	☐ BV38BBSI
	Ball Valve (5/8” SAE Brazed)	☐ BV58BBSI
Condensate	Blue Diamond (Advanced) Mini Condensate Pump w/ Reservoir & Sensor (208/230V) [recommended]	☐ X87-721
	Blue Diamond (MicroBlue) Mini Condensate Pump (110/208/230V) up to 18,000 BTU/H	☐ X86-003
	Sauermann Condensate Pump	☐ SI30-230
Control Wire	M-Net Control Wire, 1,000’ Roll (16-AWG, Standard, Twisted Pair, Shielded, Jacketed- Plenum rated)	☐ CW162S-1000
	M-Net Control Wire, 250’ Roll (16-AWG, Standard, Twisted Pair, Shielded, Jacketed- Plenum rated)	☐ CW162S-250
Port Adapter	Joint Pipe Adapter	☐ CMY-R160-J1
Valves Adaptors & Headers	Branch Joint (Downstream capacity 127,000-216,000 BTU/H)	☐ CMY-R202S-G
	Branch Joint (Downstream capacity 217,000-234,000 BTU/H)	☐ CMY-R203S-G
	Branch Joint (Downstream capacity 235,000-360,000 BTU/H)	☐ CMY-R204S-G
	Branch Joint (Downstream capacity 73,000-96,000 BTU/H)	☐ CMY-Y102LS-G2
	Branch Joint (Downstream capacity ≤126,000 BTU/H)	☐ CMY-R201S-G
	Branch Joint (Downstream capacity ≤126,000 BTU/H)	☐ CMY-Y202S-G2
	Branch Joint (Downstream capacity ≤72,000 BTU/H)	☐ CMY-Y102SS-G2
	Branch Joint (Downstream capacity ≥316,000 BTU/H)	☐ CMY-R205S-G
	Reducer (Between Main and Sub BC)	☐ CMY-R303S-G1
	Reducer (Between ODU and BC)	☐ CMY-R302S-G1

© 2022 Mitsubishi Electric Trane HVAC US LLC. All rights reserved.

INDOOR UNIT DIMENSIONS: CMB-P108NU-J1

CMB-P104, 106, 108NU-J1

Unit: mm(in)

Note 1. Suspension bolt (ø10) and nut (M10) prepare in the field.
2. Take notice of service space as shown.
(Please give attention not to occupy service space by letting ducts and pipes through.)
3. Install this product in a location where noise (refrigerant noise) emitted by the unit will not disturb the neighbors.
(For use in quiet environments with low background noise,position the BC CONTROLLER at least 5m away from any indoor units.)
4. Refer to the Installation Manual for refrigerant piping diameter size when connecting plural indoor units with 1 branch.
5. Refer to the Table-1 for connection pipe of outdoor unit diameter size.
6. Refer to the Installation Manual for insulation of connection pipe and drain piping.
7. Do not place the BC controller directly on the floor.

<Accessories>
• Square washer (with cushion)••••••••4pcs.
• Square washer••••••••••••••••••••••••4pcs.

Table-1. To outdoor/heat source unit (Note 5)

Connectable unit capacity	High press. Pipe	Low press. Pipe
P72	ø15.88 (5/8)	ø19.05 (3/4)
P96	ø19.05 (3/4)	ø22.2 (7/8)
P120	ø19.05 (3/4)	ø22.2 (7/8) or ø28.58 (1-1/8) *

*For the refrigerant pipe size, refer to the Installation Manual of outdoor units/heat source units.

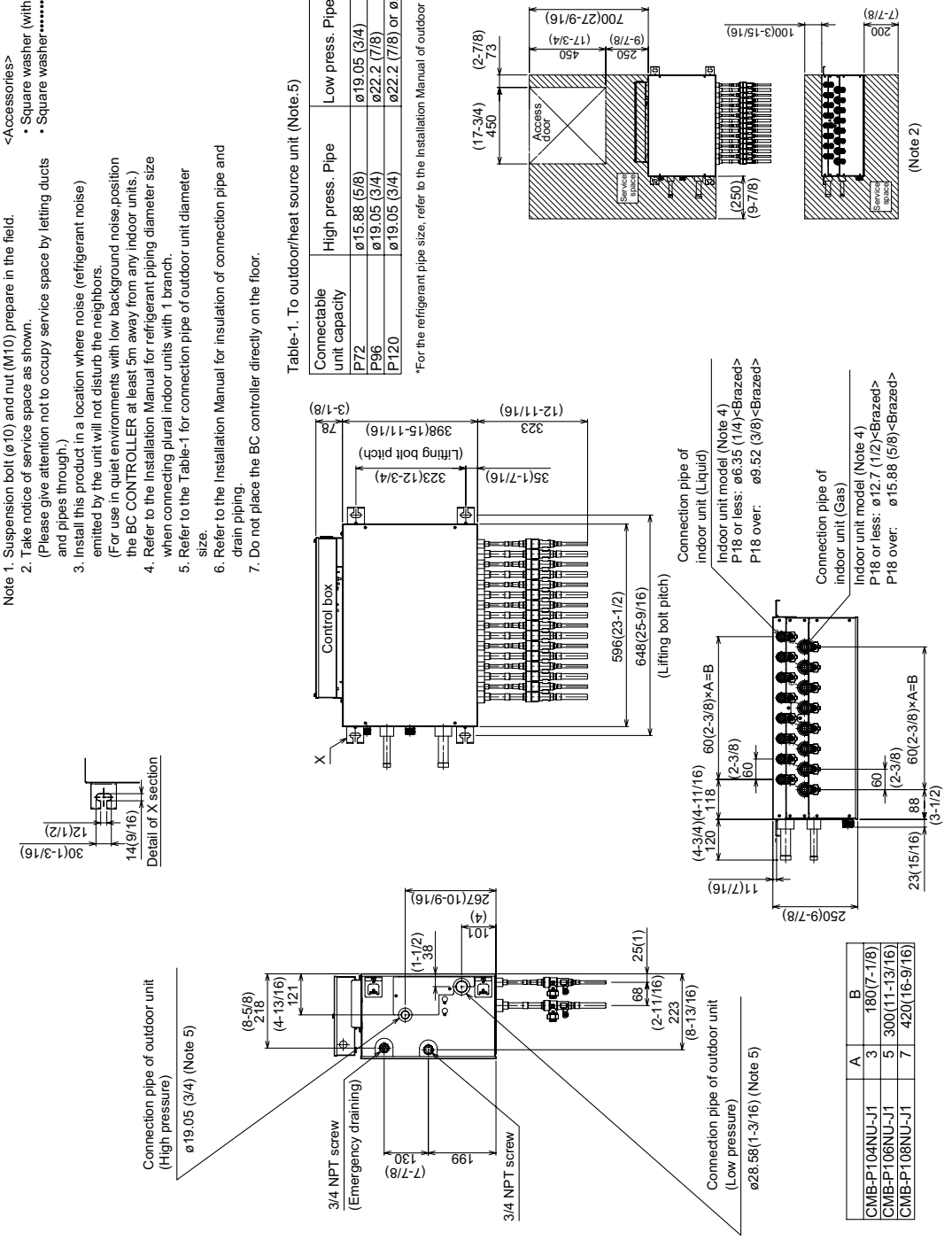

	A	B
CMB-P104NU-J1	3	180(7-1/8)
CMB-P106NU-J1	5	300(11-13/16)
CMB-P108NU-J1	7	420(16-9/16)

1340 Satellite Boulevard Suwanee, GA 30024
Toll Free: 800-433-4822 www.mehvac.com

FORM# CMB-P108NU-J1 - 202209

© 2022 Mitsubishi Electric Trane HVAC US LLC. All rights reserved.

CITYMULTI®

PEFY-P48NMAU-E4
48,000 BTU/H MEDIUM STATIC DUCTED

MITSUBISHI ELECTRIC
HEATING & AIR CONDITIONING

Job Name:
System Reference: Date:

GENERAL FEATURES
- Dual set point functionality
- Multiple fan speed settings
- Auto fan mode
- 9-7/8” (250mm) high for low ceiling heights
- Built-in condensate lift; lifts to 27-9/16” (700 mm)
- Ducted fan coil supporting multiple configurations for flexible installation

Specifications			System
Unit Type			PEFY-P48NMAU-E4
Cooling capacity (Nominal)[1]		BTU/H	48,000
Heating capacity (Nominal)[1]		BTU/H	54,000
Power source		Voltage, Phase, Hertz	208/230V, 1-phase, 60 Hz
Power Consumption	Cooling	kW	0.242
	Heating	kW	0.24
Current	Cooling	A	2.06/1.87
	Heating	A	2.06/1.87
MCA		A	4.38
Maximum Overcurrent Protection (MOCP)		A	15
External finish			Galvanized steel sheet
External Dimensions		In. [mm]	55-1/8 x 28-7/8 x 9-7/8 [1,400 x 732 x 250]
Net weight		Lbs [kg]	86 [39]
Heat exchanger			Cross fin (Aluminum fin and copper tube)
Fan	Type x quantity		Sirocco fan x 3
	External Static pressure	in.WG	0.14, 0.2, 0.28, 0.4, 0.6 factory set to 0.2 In. WG
	Airflow rate	CFM	918–1,112–1,306
	Motor type		DC Motor
	Motor Output	kW	0.3
	Motor FLA	A	3.5
Sound pressure level (Measured in anechoic room)		dB(A)	35–40–44
Air filter			PP Honeycomb fabric
Refrigerant	Type		R410A
Diameter of refrigerant pipe (O.D.)	Liquid (High Pressure)	In. [mm]	3/8 [9.52] Brazed
	Gas (Low Pressure)	In. [mm]	5/8 [15.88] Brazed
Diameter of drain pipe		In. [mm]	O.D. 1-1/4 [32]

NOTES:
[1]Cooling / Heating capacity indicated at the maximum value at operation under the following conditions:
Cooling | Indoor: 80° F (26.7° C) DB / 67° F (19.4° C) WB; Outdoor 95° F (35° C) DB
Heating | Indoor: 70° F (21.1° C) DB; Outdoor 47° F (8.3° C) DB / 43° F (6.1° C) WB

© 2022 Mitsubishi Electric Trane HVAC US LLC. All rights reserved.

INDOOR UNIT ACCESSORIES: PEFY-P48NMAU-E4

Control Interface	3-Pin Connector	☐ PAC-715AD
	BACnet® and Modbus® Interface	☐ PAC-UKPRC001-CN-1
	CN24 Relay Kit	☐ CN24RELAY-KIT-CM3
	Connector and wire for Operation status/error using CN51	☐ PAC-725AD
	IT Extender	☐ PAC-WHS01IE-E
	kumo station® for kumo cloud®	☐ PAC-WHS01HC-E
	Thermostat Interface	☐ PAC-US444CN-1
	Thermostat Interface	☐ PAC-US445CN-1
	Wireless Interface for kumo cloud®	☐ PAC-USWHS002-WF-2
Remote Sensor	Flush Mount Remote Temperature Sensor	☐ PAC-USSEN002-FM-1
	Flush Mount Temperature Sensor	☐ PAC-USSEN001-FM-1
	Remote Temperature Sensor	☐ PAC-SE41TS-E
	Wireless temperature and humitity sensor for kumo cloud®	☐ PAC-USWHS003-TH-1
Terminal Signal Adapter	Terminal Signal Adapter	☐ PAC-IT51AD-E
Wired Remote Controller	Deluxe Wired MA Remote Controller†	☐ PAR-40MAAU
	Simple MA Remote Controller†	☐ PAC-YT53CRAU-J
	Smart ME Remote Controller - Backlit touchscreen	☐ PAR-U01MEDU-K
	Touch MA Controller†	☐ PAR-CT01MAU-SB
Wireless Remote Controller	kumo touch™ RedLINK™ Wireless Controller	☐ MHK2
	Wireless MA Receiver	☐ PAR-FA32MA-W
	Wireless MA Remote Controller	☐ PAR-FL32MA-E
Condensate	Blue Diamond (Advanced) Mini Condensate Pump w/ Reservoir & Sensor (208/230V) [recommended]	☐ X87-721
	Blue Diamond (MegaBlue Advanced) Condensate Pump w/ Reservoir & Sensor	☐ X87-835
	Blue Diamond MultiTank — collection tank for use with multiple pumps	☐ C21-014
	Blue Diamond Sensor Extension Cable — 15 Ft.	☐ C13-103
	Refco Condensate Pump (100-240 VAC) up to 120,000 BTU/H	☐ COMBI
	Sauermann Condensate Pump	☐ SI30-230
Filter Box	Filter Box with MERV 13 Filter	☐ FBM2-4-A
Lineset	10’ x 3/8” x 10’ x 5/8” Lineset (Twin-Tube Insulation)††	☐ MPLS385812T-10
	100’ x 3/8” x 100’ x 5/8” Lineset (Twin-Tube Insulation)††	☐ MPLS385812T-100
	15’ x 3/8” x 15’ x 5/8” Lineset (Twin-Tube Insulation)††	☐ MPLS385812T-15
	30’ x 3/8” x 30’ x 5/8” Lineset (Twin-Tube Insulation)††	☐ MPLS385812T-30
	50’ x 3/8” x 50’ x 5/8” Lineset (Twin-Tube Insulation)††	☐ MPLS385812T-50
	65’ x 3/8” x 65’ x 5/8” Lineset (Twin-Tube Insulation)††	☐ MPLS385812T-65

© 2022 Mitsubishi Electric Trane HVAC US LLC. All rights reserved.

INDOOR UNIT DIMENSIONS: PEFY-P48NMAU-E4

Unit : mm(in.)

Note
1. Use an M10 screw for the suspension bolt (field supply).
2. Keep the service space for maintenance at the bottom.
3. This drawing is for PEFY-P24·27·30NMAU-E4 models, which have 2 fans. PEFY-P06·08·12NMAU-E4 models have 1 fan. PEFY-P15·18NMAU-E4 models have 2 fans. PEFY-P36·48·54NMAU-E4 models have 3 fans.
4. If the inlet duct is used, remove the air filter (supplied with the unit), then install the filter (field supply) at the suction side.
5. Heat air to 0°C (32°F) or higher when taking fresh air with a fresh air intake.

Unit:mm(in.)

Model	① Gas pipe	② Liquid pipe
PEFY-P06,08,12NMAU-E4	Ø12.7 (1/2)	Ø6.35 (1/4)
PEFY-P15,18NMAU-E4		
PEFY-P24,27,30NMAU-E4	Ø15.88 (5/8)	Ø9.52 (3/8)
PEFY-P36,48NMAU-E4		
PEFY-P54NMAU-E4		

Unit:mm(in.)

Model	A	B	C	D	E	F	G
PEFY-P06,08,12NMAU-E4	700 (27-9/16)	754 (29-11/16)	800 (31-1/2)	660 (26)	7	600 (23-5/8)	658 (25-15/16)
PEFY-P15,18NMAU-E4	900 (35-7/16)	954 (37-9/16)	1000 (39-3/8)	860 (33-7/8)	9	800 (31-1/2)	858 (33-13/16)
PEFY-P24,27,30NMAU-E4	1100 (43-5/16)	1154 (45-7/16)	1200 (47-1/4)	1060 (41-3/4)	11	1000 (39-3/8)	1058 (41-11/16)
PEFY-P36,48NMAU-E4	1400 (55-1/8)	1454 (57-1/4)	1500 (59-1/16)	1360 (53-9/16)	14	1300 (51-3/16)	1358 (53-1/2)
PEFY-P54NMAU-E4	1600 (63)	1654 (65-1/8)	1700 (66-15/16)	1560 (61-7/16)	16	1500 (59-1/16)	1558 (61-3/8)

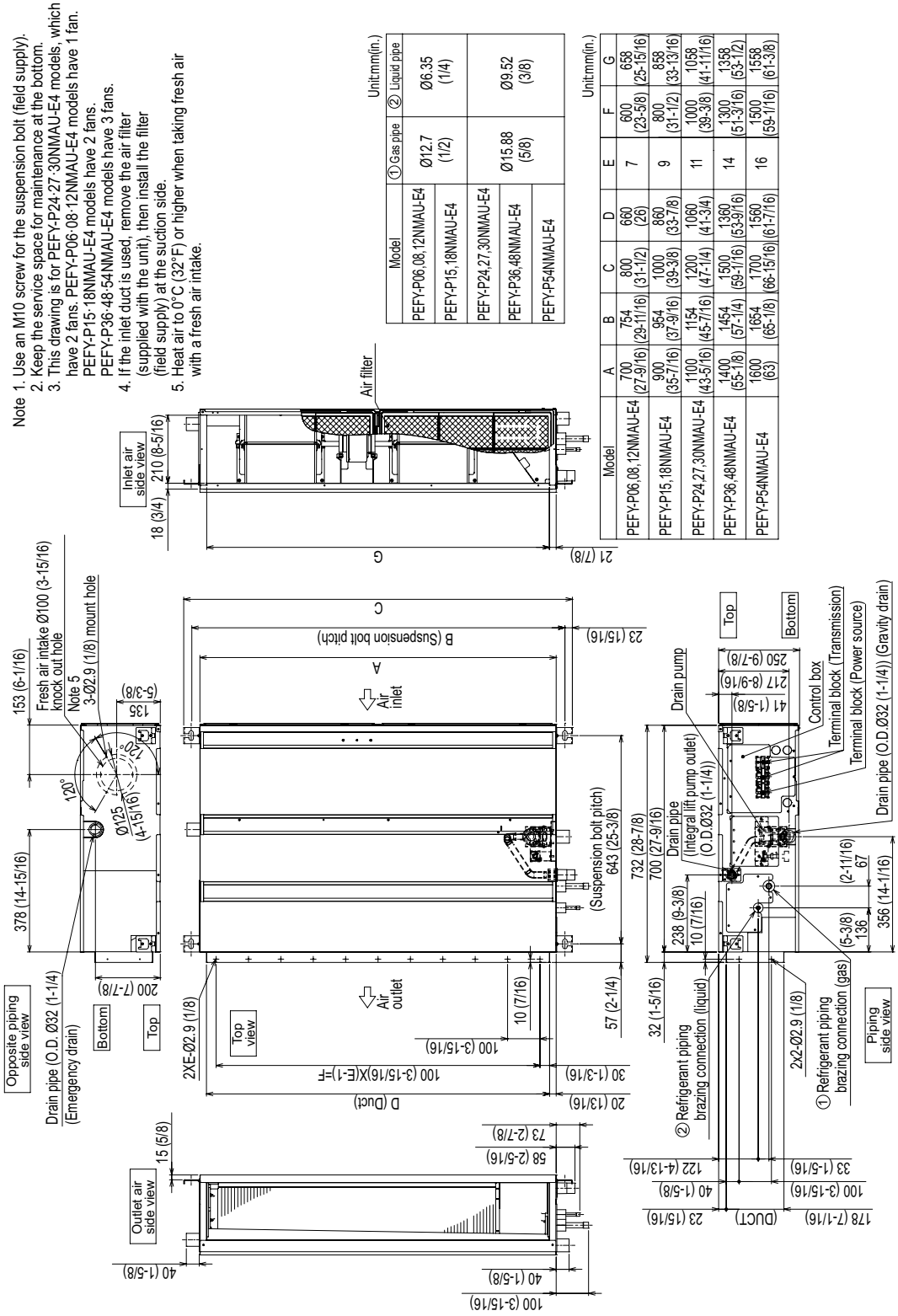

1340 Satellite Boulevard Suwanee, GA 30024
Toll Free: 800-433-4822 www.mehvac.com

FORM# PEFY-P48NMAU-E4 - 202211

© 2022 Mitsubishi Electric Trane HVAC US LLC. All rights reserved.

CITYMULTI®

PEFY-P24NMAU-E4
24,000 BTU/H MEDIUM STATIC DUCTED

MITSUBISHI ELECTRIC
HEATING & AIR CONDITIONING

Job Name:

System Reference: Date:

GENERAL FEATURES

- Dual set point functionality
- Multiple fan speed settings
- Auto fan mode
- 9-7/8” (250mm) high for low ceiling heights
- Built-in condensate lift; lifts to 27-9/16” (700 mm)
- Ducted fan coil supporting multiple configurations for flexible installation

Specifications			System
Unit Type			PEFY-P24NMAU-E4
Cooling capacity (Nominal)[1]		BTU/H	24,000
Heating capacity (Nominal)[1]		BTU/H	27,000
Power source		Voltage, Phase, Hertz	208/230V, 1-phase, 60 Hz
Power Consumption	Cooling	kW	0.142
	Heating	kW	0.14
Current	Cooling	A	1.24/1.12
	Heating	A	1.24/1.12
MCA		A	2.88
Maximum Overcurrent Protection (MOCP)		A	15
External finish			Galvanized steel sheet
External Dimensions		In. [mm]	43-5/16 x 28-7/8 x 9-7/8 [1,100 x 732 x 250]
Net weight		Lbs [kg]	67 [30]
Heat exchanger			Cross fin (Aluminum fin and copper tube)
Fan	Type x quantity		Sirocco fan x 2
	External Static pressure	in.WG	0.14, 0.2, 0.28, 0.4, 0.6 factory set to 0.2 In. WG
	Airflow rate	CFM	618–742–883
	Motor type		DC Motor
	Motor Output	kW	0.121
	Motor FLA	A	2.3
Sound pressure level (Measured in anechoic room)		dB(A)	31–35–39
Air filter			PP Honeycomb fabric
Refrigerant	Type		R410A
Diameter of refrigerant pipe (O.D.)	Liquid (High Pressure)	In. [mm]	3/8 [9.52] Brazed
	Gas (Low Pressure)	In. [mm]	5/8 [15.88] Brazed
Diameter of drain pipe		In. [mm]	O.D. 1-1/4 [32]

NOTES:
[1]Cooling / Heating capacity indicated at the maximum value at operation under the following conditions:
Cooling | Indoor: 80° F (26.7° C) DB / 67° F (19.4° C) WB; Outdoor 95° F (35° C) DB
Heating | Indoor: 70° F (21.1° C) DB; Outdoor 47° F (8.3° C) DB / 43° F (6.1° C) WB

© 2022 Mitsubishi Electric Trane HVAC US LLC. All rights reserved.

INDOOR UNIT ACCESSORIES: PEFY-P24NMAU-E4

Control Interface	3-Pin Connector	☐ PAC-715AD
	BACnet® and Modbus® Interface	☐ PAC-UKPRC001-CN-1
	CN24 Relay Kit	☐ CN24RELAY-KIT-CM3
	Connector and wire for Operation status/error using CN51	☐ PAC-725AD
	IT Extender	☐ PAC-WHS01IE-E
	kumo station® for kumo cloud®	☐ PAC-WHS01HC-E
	Thermostat Interface	☐ PAC-US444CN-1
	Thermostat Interface	☐ PAC-US445CN-1
	Wireless Interface for kumo cloud®	☐ PAC-USWHS002-WF-2
Remote Sensor	Flush Mount Remote Temperature Sensor	☐ PAC-USSEN002-FM-1
	Flush Mount Temperature Sensor	☐ PAC-USSEN001-FM-1
	Remote Temperature Sensor	☐ PAC-SE41TS-E
	Wireless temperature and humitity sensor for kumo cloud®	☐ PAC-USWHS003-TH-1
Terminal Signal Adapter	Terminal Signal Adapter	☐ PAC-IT51AD-E
Wired Remote Controller	Deluxe Wired MA Remote Controller†	☐ PAR-40MAAU
	Simple MA Remote Controller†	☐ PAC-YT53CRAU-J
	Smart ME Remote Controller - Backlit touchscreen	☐ PAR-U01MEDU-K
	Touch MA Controller†	☐ PAR-CT01MAU-SB
Wireless Remote Controller	kumo touch™ RedLINK™ Wireless Controller	☐ MHK2
	Wireless MA Receiver	☐ PAR-FA32MA-W
	Wireless MA Remote Controller	☐ PAR-FL32MA-E
Condensate	Blue Diamond (Advanced) Mini Condensate Pump w/ Reservoir & Sensor (208/230V) [recommended]	☐ X87-721
	Blue Diamond (MegaBlue Advanced) Condensate Pump w/ Reservoir & Sensor	☐ X87-835
	Blue Diamond MultiTank — collection tank for use with multiple pumps	☐ C21-014
	Blue Diamond Sensor Extension Cable — 15 Ft.	☐ C13-103
	Refco Condensate Pump (100-240 VAC) up to 120,000 BTU/H	☐ COMBI
	Sauermann Condensate Pump	☐ SI30-230
Filter Box	Filter Box with MERV 13 Filter	☐ FBM2-3-A
Lineset	10’ x 3/8” x 10’ x 5/8” Lineset (Twin-Tube Insulation)††	☐ MPLS385812T-10
	100’ x 3/8” x 100’ x 5/8” Lineset (Twin-Tube Insulation)††	☐ MPLS385812T-100
	15’ x 3/8” x 15’ x 5/8” Lineset (Twin-Tube Insulation)††	☐ MPLS385812T-15
	30’ x 3/8” x 30’ x 5/8” Lineset (Twin-Tube Insulation)††	☐ MPLS385812T-30
	50’ x 3/8” x 50’ x 5/8” Lineset (Twin-Tube Insulation)††	☐ MPLS385812T-50
	65’ x 3/8” x 65’ x 5/8” Lineset (Twin-Tube Insulation)††	☐ MPLS385812T-65

© 2022 Mitsubishi Electric Trane HVAC US LLC. All rights reserved.

INDOOR UNIT DIMENSIONS: PEFY-P24NMAU-E4

Unit : mm(in.)

Note
1. Use an M10 screw for the suspension bolt (field supply).
2. Keep the service space for maintenance at the bottom.
3. This drawing is for PEFY-P24·27·30NMAU-E4 models, which have 2 fans. PEFY-P06·08·12NMAU-E4 models have 2 fans. PEFY-P15·18NMAU-E4 models have 1 fan. PEFY-P36·48·54NMAU-E4 models have 3 fans.
4. If the inlet duct is used, remove the air filter (supplied with the unit), then install the filter (field supply) at the suction side.
5. Heat air to 0°C (32°F) or higher when taking fresh air with a fresh air intake.

Unit:mm(in.)

Model	① Gas pipe	② Liquid pipe
PEFY-P06,08,12NMAU-E4	Ø12.7 (1/2)	Ø6.35 (1/4)
PEFY-P15,18NMAU-E4		
PEFY-P24,27,30NMAU-E4	Ø15.88 (5/8)	Ø9.52 (3/8)
PEFY-P36,48NMAU-E4		
PEFY-P54NMAU-E4		

Unit:mm(in.)

Model	A	B	C	D	E	F	G
PEFY-P06,08,12NMAU-E4	700 (27-9/16)	754 (29-11/16)	800 (31-1/2)	660 (26)	7	600 (23-5/8)	658 (25-15/16)
PEFY-P15,18NMAU-E4	900 (35-7/16)	954 (37-9/16)	1000 (39-3/8)	860 (33-7/8)	9	800 (31-1/2)	858 (33-13/16)
PEFY-P24,27,30NMAU-E4	1100 (43-5/16)	1154 (45-7/16)	1200 (47-1/4)	1060 (41-3/4)	11	1000 (39-3/8)	1058 (41-11/16)
PEFY-P36,48NMAU-E4	1400 (55-1/8)	1454 (57-1/4)	1500 (59-1/16)	1360 (53-9/16)	14	1300 (51-3/16)	1358 (53-1/2)
PEFY-P54NMAU-E4	1600 (63)	1654 (65-1/8)	1700 (66-15/16)	1560 (61-7/16)	16	1500 (59-1/16)	1558 (61-3/8)

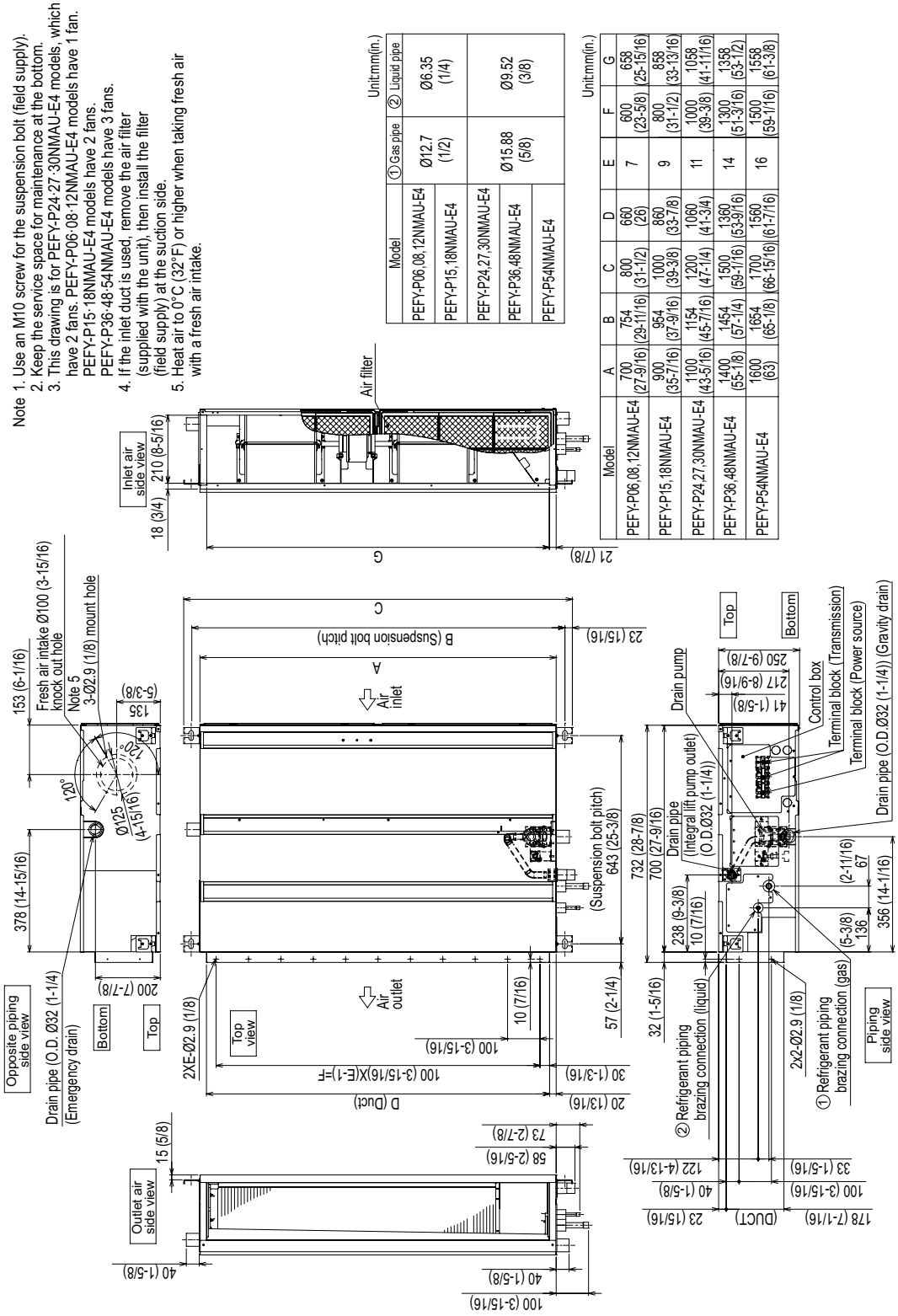

1340 Satellite Boulevard Suwanee, GA 30024
Toll Free: 800-433-4822 www.mehvac.com

Specifications are subject to change without notice.

© 2022 Mitsubishi Electric Trane HVAC US LLC. All rights reserved.

PLA-A24EA7 & PUZ-HA24NHA1
24,000 BTU/H 3' X 3' CEILING CASSETTE
24,000 BTU/H HYPER-HEATING UNIVERSAL OUTDOOR

Job Name:	
System Reference:	Date:

Indoor Unit.....PLA-A24EA7

Outdoor Unit.....PUZ-HA24NHA1

INDOOR UNIT FEATURES
- Space-efficient ductless installation
- Equipped with 3D i-see Sensor® for enhanced comfort and energy efficiency
- Airflow settings for high and low ceiling applications
- Individual vane settings for direct/indirect airflow control or variable airflow patterns
- Knockouts for outside-air intake and branch-duct run
- Filter indicator signal
- Easy-to-clean, washable filter (optional high-efficiency filter available - requires multi-function casement)
- Built-in condensate lift mechanism
- Ideal for retail shops, classrooms, office spaces, conference centers, building lobbies, and more
- Multiple control options available:
  - kumo cloud® smart device app for remote access
  - Third-party interface options
  - Wired or wireless controllers

OUTDOOR UNIT FEATURES
- Variable speed INVERTER-driven compressor
- Wide heating range: heating performance down to -13°F (average of 80% heating capacity)
- High speed heating at start up: Hyper-Heating INVERTER® reduces the time for heating at start up by about half compared to standard models
- Pre-charged with refrigerant volume for piping length up to 70 ft.
- High pressure/temperature protection
- Built-in base pan heater

© 2023 Mitsubishi Electric Trane HVAC US LLC. All rights reserved.

SPECIFICATIONS: PLA-A24EA7 & PUZ-HA24NHA1

Cooling at 95°F[1]	Maximum Capacity	BTU/H	24,000
	Rated Capacity	BTU/H	24,000
	Minimum Capacity	BTU/H	10,000
	Maximum Power Input	W	1,710
	Rated Power Input	W	1,710
	Moisture Removal	Pints/h	3.0
	Sensible Heat Factor		0.86
	Power Factor [208V / 230V]	%	98.0 / 98.0
Heating at 47°F[2]	Maximum Capacity	BTU/H	28,000
	Rated Capacity	BTU/H	26,000
	Minimum Capacity	BTU/H	10,000
	Maximum Power Input	W	1,900
	Rated Power Input	W	1,700
	Power Factor [208V / 230V]	%	98.0 / 98.0
Heating at 17°F[3]	Maximum Capacity	BTU/H	26,000
	Rated Capacity	BTU/H	17,300
	Maximum Power Input	W	3,000
	Rated Power Input	W	1,816
Heating at 5°F[4]	Maximum Capacity	BTU/H	26,000
	Maximum Power Input	W	3,966
Heating at -13°F[7]	Maximum Capacity	BTU/H	20,800
Efficiency	SEER2		21.6
	EER2[1]		14.0
	HSPF2 [IV]		10.0
	COP at 47°F[2]		4.5
	COP at 17°F at Maximum Capacity[3]		2.5
	COP at 5°F at Maximum Capacity[4]		1.9
Electrical	Voltage, Phase, Frequency		208/230, 1, 60
	Guaranteed Voltage Range	V AC	198 - 253
	Voltage: Indoor - Outdoor, S1-S2	V AC	208/230
	Voltage: Indoor - Outdoor, S2-S3	V DC	24
	Short-circuit Current Rating [SCCR]	kA	5
	Recommended Fuse/Breaker Size (Oudoor)	A	25
	Recommended Wire Size [Indoor - Outdoor]	AWG	14
	Power Supply		Indoor unit is powered by the outdoor unit
Indoor Unit	MCA	A	1.0
	Fan Motor Full Load Amperage	A	0.49
	Fan Motor Type		DC Motor
	Airflow Rate at Cooling, Dry	CFM	530–640–710–810
	Airflow Rate at Cooling, Wet	CFM	490–600–670–770
	Airflow Rate at Heating, Dry	CFM	530–640–710–810
	Sound Pressure Level [Cooling]	dB[A]	28–30–33–36
	Sound Pressure Level [Heating]	dB[A]	28–30–33–36
	Drain Pipe Size	In. [mm]	1-1/4 [32]
	Condensate Lift Mechanism, Maximum Distance	In. [mm]	33-7/16 [849]
	Coating on Heat Exchanger		—
	External Finish Color		White Munsell 6.4Y 8.9/0.4
	Unit Dimensions	W x D x H: In. [mm]	33-1/16 // 37-13/32 x 33-1/16 // 37-13/32 x 11-3/4 // 1-9/16 [840 // 950 x 840 // 950 x 298 // 40]
	Package Dimensions	W x D x H: In. [mm]	35-9/16 // 39-6/16 x 34-5/16 // 38-3/16 x 16-9/16 // 4-12/16 [903 // 1,000 x 871 // 970 x 421 // 121]
	Unit Weight	Lbs. [kg]	56 // 11 [25 // 5]
	Package Weight	Lbs. [kg]	68 [31]
Indoor Unit Operating Temperature Range	Cooling Intake Air Temp [Maximum / Minimum]*	°F	90 DB, 72 WB / 66 DB, 61 WB
	Heating Intake Air Temp [Maximum / Minimum]	°F	77 DB / 59 DB

NOTES:

AHRI Rated Conditions (Rated data is determined at a fixed compressor speed)	[1]Cooling (Indoor // Outdoor)	°F	80 DB, 67 WB // 95 DB, 75 WB
	[2]Heating at 47°F (Indoor // Outdoor)	°F	70 DB, 60 WB // 47 DB, 43 WB
	[3]Heating at 17°F (Indoor // Outdoor)	°F	70 DB, 60 WB // 17 DB, 15 WB
Conditions	[4]Heating at 5°F (Indoor // Outdoor)	°F	70 DB, 60 WB // 5 DB, 4 WB
	[7]Heating at -13°F (Indoor // Outdoor)	°F	70 DB, 60 WB // -13 DB, -14 WB

* Indoor/Outdoor Unit Operating Temperature Range (Cooling Air Temp [Maximum / Minimum]):
- Wind baffles required to operate below 23°F DB in cooling mode.
- Refer to wind baffle documentation for further information.

**Outdoor Unit Operating Temperature Range (Cooling Thermal Lock-out / Re-start Temperatures; Heating Thermal Lock-out / Re-start Temperatures):
- System cuts out in heating mode to avoid thermistor error and automatically restarts at these temperatures.

© 2023 Mitsubishi Electric Trane HVAC US LLC. All rights reserved.

SPECIFICATIONS: PLA-A24EA7 & PUZ-HA24NHA1

Outdoor Unit	MCA	A	17.0
	MOCP	A	27
	Fan Motor Output	W	74
	Airflow Rate [Cooling / Heating]	CFM	1940 / 1940
	Refrigerant Control		LEV
	Defrost Method		Reverse Cycle
	Sound Pressure Level, Cooling[1]	dB(A)	52
	Sound Pressure Level, Heating[2]	dB(A)	53
	Compressor Type		Scroll
	Compressor Model		DNB28FBAMT
	Compressor Rated Load Amps	A	9
	Compressor Locked Rotor Amps	A	18.0
	Compressor Oil [Type // Charge]	oz.	FVC68D // 34
	External Finish Color		Ivory Munsell 3Y 7.8/1.1
	Base Pan Heater		Built-in
	Unit Dimensions	W x D x H: In. [mm]	37-13/32 x 14-3/16 x 37-1/8 [950 x 360 x 943]
	Package Dimensions	W x D x H: In. [mm]	41 x 18 x 41 [1040 x 450 x 1033]
	Unit Weight	Lbs. [kg]	190 [86]
	Package Weight	Lbs. [kg]	210 [95]
Outdoor Unit Operating Temperature Range	Cooling Air Temp [Maximum / Minimum]*	°F	115 DB / 0 DB
	Heating Air Temp [Maximum / Minimum]	°F	70 DB, 59 WB / -13 DB, -13 WB
	Heating Thermal Lock-out / Re-start Temperatures**	°F	-22 / -13
Refrigerant	Type		R410A
	Pre-Charged Refrigerant Amount	Lbs, oz	7.0, 11.0
	Maximum Pre-Charged Piping Length	Ft. [m]	70.0 [21.0]
	Additional Refrigerant Charge Per Additional Piping Length	oz./Ft. [g/m]	0.7 [65]
Piping	Gas Pipe Size O.D. [Flared]	In.[mm]	5/8 [15.88]
	Liquid Pipe Size O.D. [Flared]	In.[mm]	3/8 [9.52]
	Maximum Piping Length	Ft. [m]	165 [50]
	Maximum Height Difference	Ft. [m]	100 [30]
	Maximum Number of Bends		15

NOTES:

AHRI Rated Conditions (Rated data is determined at a fixed compressor speed)	[1]Cooling (Indoor // Outdoor)	°F	80 DB, 67 WB // 95 DB, 75 WB
	[2]Heating at 47°F (Indoor // Outdoor)	°F	70 DB, 60 WB // 47 DB, 43 WB
	[3]Heating at 17°F (Indoor // Outdoor)	°F	70 DB, 60 WB // 17 DB, 15 WB
Conditions	[4]Heating at 5°F (Indoor // Outdoor)	°F	70 DB, 60 WB // 5 DB, 4 WB
	[7]Heating at -13°F (Indoor // Outdoor)	°F	70 DB, 60 WB // -13 DB, -14 WB

* Indoor/Outdoor Unit Operating Temperature Range (Cooling Air Temp [Maximum / Minimum]):
- Wind baffles required to operate below 23°F DB in cooling mode.
- Refer to wind baffle documentation for further information.

**Outdoor Unit Operating Temperature Range (Cooling Thermal Lock-out / Re-start Temperatures; Heating Thermal Lock-out / Re-start Temperatures):
- System cuts out in heating mode to avoid thermistor error and automatically restarts at these temperatures.

© 2023 Mitsubishi Electric Trane HVAC US LLC. All rights reserved.

INDOOR UNIT ACCESSORIES: PLA-A24EA7

Control Interface	3-Pin Connector	☐ PAC-715AD
	Airzone ZBS Wired Blueface Principal Controller White	☐ AZZBSBLUEFACECB
	Airzone ZBS Wired Blueface Principal Controller White	☐ AZZBSBLUEZEROCB
	Airzone ZBS Wired Lite Controller White	☐ AZZBSLITECB
	Airzone ZBS Wireless Lite Controller White	☐ AZZBSLITERB
	Airzone ZBS Wireless Think Controller White	☐ AZZBSTHINKRB
	CN24 Relay Kit	☐ CN24RELAY-KIT-CM3
	IT Extender	☐ PAC-WHS01IE-E
	kumo station® for kumo cloud®	☐ PAC-WHS01HC-E
	Procon BACnet® and Modbus® Interface	☐ PAC-UKPRC001-CN-1
	Remote Operation Adapter‡	☐ PAC-SF40RM-E
	Thermostat Interface	☐ PAC-US444CN-1
	Thermostat Interface	☐ PAC-US445CN-1
	USNAP Adapter	☐ PAC-WHS01UP-E
	Wireless Interface for kumo cloud®	☐ PAC-USWHS002-WF-2
Remote Sensor	Flush Mount Remote Temperature Sensor	☐ PAC-USSEN002-FM-1
	Flush Mount Temperature Sensor	☐ PAC-USSEN001-FM-1
	Remote Temperature Sensor	☐ PAC-SE41TS-E
	Wireless temperature and humidity sensor for kumo cloud®	☐ PAC-USWHS003-TH-1
Wired Remote Controller	Deluxe Wired MA Remote Controller†	☐ PAR-40MAAU
	Simple Ductless Wired Remote Controller	☐ PAC-SDW01RC-1
	Simple MA Remote Controller†	☐ PAC-YT53CRAU-J
	Touch MA Controller†	☐ PAR-CT01MAU-SB
Wireless Remote Controller	kumo touch™ RedLINK™ Wireless Controller	☐ MHK2
	Lockdown bracket for remote controller	☐ RCMKP1CB
	Wireless MA Receiver	☐ PAR-FA32MA-W
	Wireless MA Remote Controller	☐ PAR-FL32MA-E
	Wireless Remote Contoller	☐ PAR-SL101A-E
	Wireless Signal Receiver Panel	☐ PAR-SR4LU-E
Casement	Multi-function Casement	☐ PAC-SJ41TM-E
Condensate	Blue Diamond (Advanced) Mini Condensate Pump w/ Reservoir & Sensor (208/230V) [recommended]	☐ X87-721
	Blue Diamond (MegaBlue Advanced) Condensate Pump w/ Reservoir & Sensor	☐ X87-835
	Blue Diamond Sensor Extension Cable — 15 Ft.	☐ C13-103
	Refco Condensate Pump (100-240 VAC) up to 120,000 BTU/H	☐ COMBI
Disconnect Switch	(30A/600V/UL) [fits 2” X 4” utility box] - Black	☐ TAZ-MS303
	(30A/600V/UL) [fits 2” X 4” utility box] - White	☐ TAZ-MS303W
Filter	High Efficiency Filter Element**	☐ PAC-SH59KF-E
i-see Sensor® Panel	Grille with 3D i-see Sensor® (required)	✔ PLP-41EAEU
Lineset	10’ x 3/8” x 10’ x 5/8” Lineset (Twin-Tube Insulation)	☐ MPLS385812T-10
	100’ x 3/8” x 100’ x 5/8” Lineset (Twin-Tube Insulation)	☐ MPLS385812T-100
	15’ x 3/8” x 15’ x 5/8” Lineset (Twin-Tube Insulation)	☐ MPLS385812T-15
	30’ x 3/8” x 30’ x 5/8” Lineset (Twin-Tube Insulation)	☐ MPLS385812T-30
	50’ x 3/8” x 50’ x 5/8” Lineset (Twin-Tube Insulation)	☐ MPLS385812T-50
	65’ x 3/8” x 65’ x 5/8” Lineset (Twin-Tube Insulation)	☐ MPLS385812T-65
Shutter Plate	Shutter Plate	☐ PAC-SJ37SP-E
Space Panel	Space Panel	☐ PAC-SJ38AS-E

NOTES:
‡PAC-SF40RM-E (Unable to use with wireless remote controller)

© 2023 Mitsubishi Electric Trane HVAC US LLC. All rights reserved.

OUTDOOR UNIT ACCESSORIES: PUZ-HA24NHA1

Air Outlet Guide	Air Outlet Guide (1 Piece)	☐ PAC-SG59SG-E
Control/Service Tool	Control/Service Tool	☐ PAC-SK52ST
Hail Guards	Hail Guard	☐ HG-A6
M-NET Converter	M-NET Converter	☐ PAC-SJ85MA-E
	M-NET Converter	☐ PAC-SJ95MA-E
Mounting Pad	Condensing Unit Mounting Pad: 24” x 42” x 3”	☐ ULTRILITE2
Stand	18” Single Fan Stand	☐ QSMS1801M
	24” Single Fan Stand	☐ QSMS2401M
	Condenser Wall Bracket	☐ QSWB2000M-1
	Condenser Wall Bracket - Stainless Steel Finish	☐ QSWBSS
	Outdoor Unit Stand — 12” High	☐ QSMS1201M
Wind Baffle	Front Wind Baffle	☐ WB-PA5
	Rear Wind Baffle	☐ WB-RE5
	Side Advanced Wind Baffle	☐ WB-SD5

© 2023 Mitsubishi Electric Trane HVAC US LLC. All rights reserved.

INDOOR UNIT DIMENSIONS: PLA-A24EA7

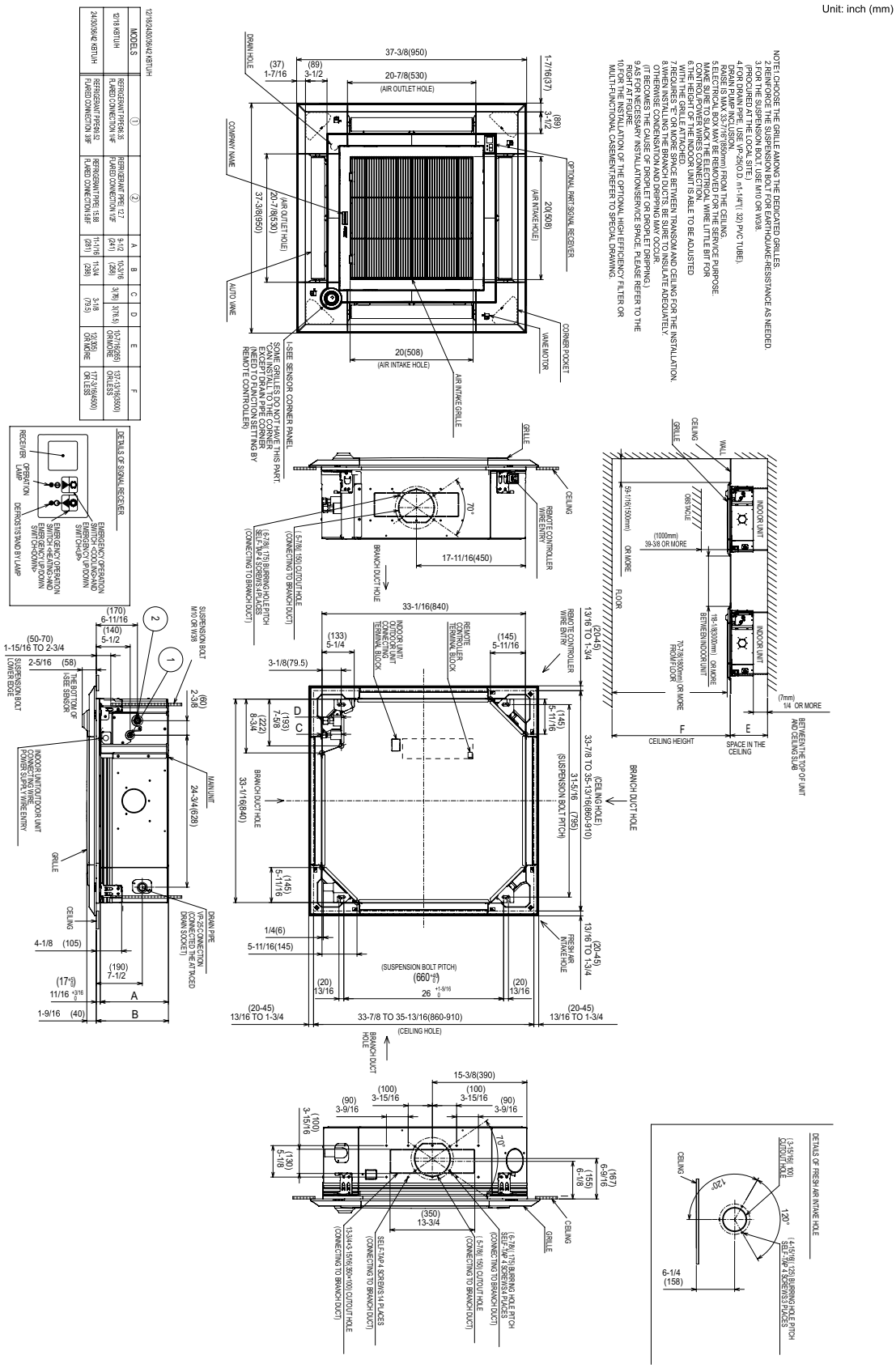

© 2023 Mitsubishi Electric Trane HVAC US LLC. All rights reserved.

OUTDOOR UNIT DIMENSIONS: PUZ-HA24NHA1

Unit: mm<in>

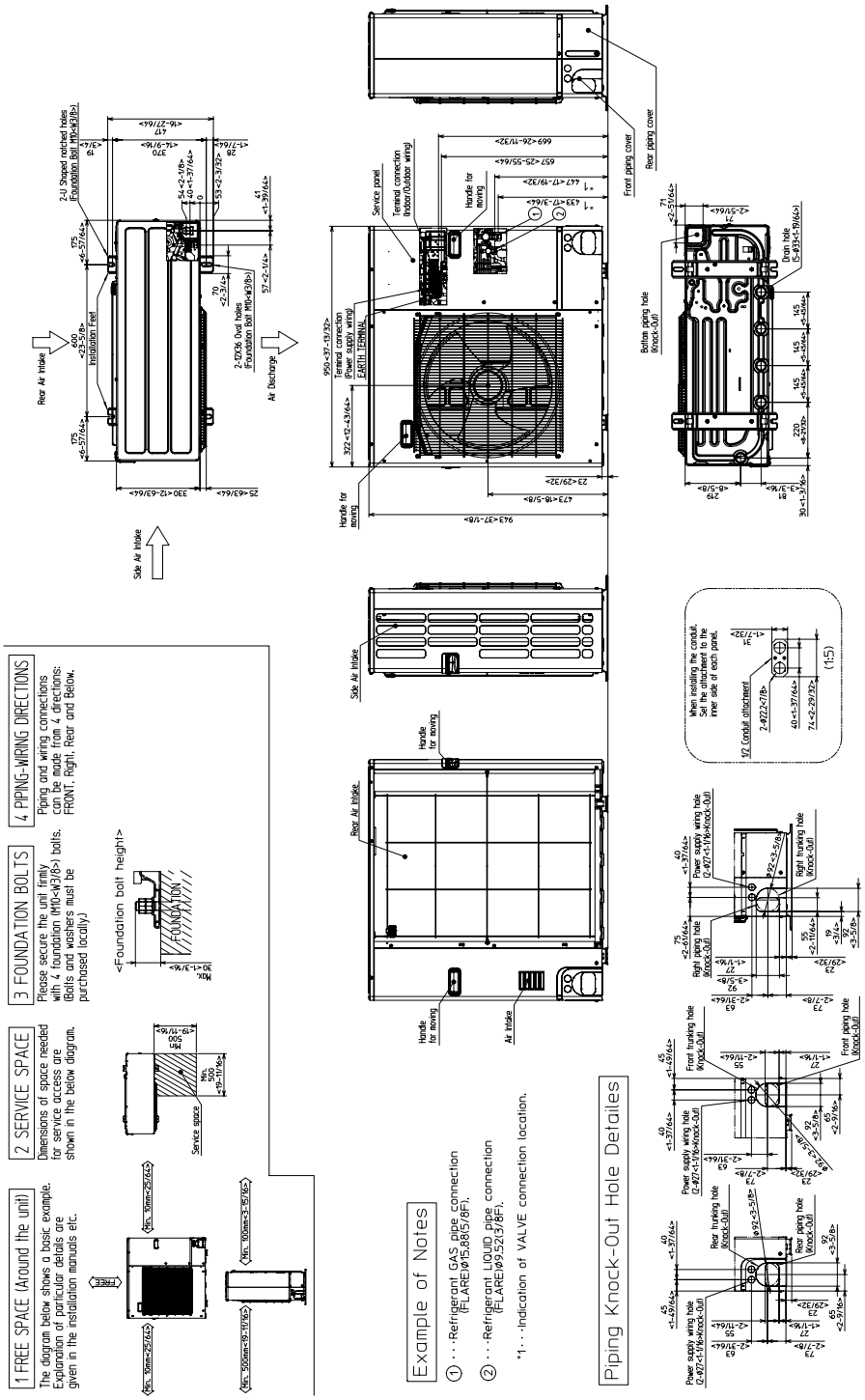

1340 Satellite Boulevard Suwanee, GA 30024
Toll Free: 800-433-4822 www.mehvac.com

FORM# PLA-A24EA7 & PUZ-HA24NHA1 - 202307

© 2023 Mitsubishi Electric Trane HVAC US LLC. All rights reserved.

PKA-A18LA & PUY-A18NKA7(-BS)
18,000 BTU/H WALL MOUNT
18,000 BTU/H COOLING ONLY OUTDOOR

Job Name:	
System Reference:	Date:

Indoor Unit PKA-A18LA

Outdoor Unit
- ☐ Standard Model PUY-A18NKA7
- ☐ Seacoast Model PUY-A18NKA7-BS

INDOOR UNIT FEATURES
- Selectable high sensible vs high latent capacity mode
- UL 60335-2-40 compliant
- Sleek, compact design
- Simple installation
- Airflow direction control
- Auto fan mode
- Suitable for: server rooms, daycare centers, classrooms, churches, small offices, and more
- Multiple control options available:
  - kumo cloud® smart device app for remote access
  - Third-party interface options
  - Wired or wireless controllers

OUTDOOR UNIT FEATURES
- Variable speed INVERTER-driven compressor
- Power receiver pre-charged with refrigerant volume for piping length up to 70 ft
- Low ambient cooling down to -40°F providing 100% capacity (with wind baffles)
- 24-hour continuous operation (cooling mode)
- High pressure protection
- Fast restart
- Superior energy and operational efficiency

© 2022 Mitsubishi Electric Trane HVAC US LLC. All rights reserved.

SPECIFICATIONS: PKA-A18LA & PUY-A18NKA7(-BS)

Cooling at 95°F[1]	Maximum Capacity	BTU/H	18,000
	Rated Capacity	BTU/H	18,000
	Minimum Capacity	BTU/H	5,600
	Maximum Power Input	W	1,680
	Rated Power Input	W	1,680
	Moisture Removal	Pints/h	5.8
	Sensible Heat Factor		0.73
	Power Factor [208V / 230V]	%	96.7 / 96.7
Efficiency	SEER		19.8
	EER[1]		10.7
	ENERGY STAR® Certified		No
Electrical	Voltage, Phase, Frequency		208/230, 1, 60
	Guaranteed Voltage Range	V AC	198 - 253
	Voltage: Indoor - Outdoor, S1-S2	V AC	208/230
	Voltage: Indoor - Outdoor, S2-S3	V DC	24
	Short-circuit Current Rating [SCCR]	kA	5
	Recommended Fuse/Breaker Size (Oudoor)	A	15
	Recommended Wire Size [Indoor - Outdoor]	AWG	14
	Power Supply		Indoor unit is powered by the outdoor unit
Indoor Unit	MCA	A	1.0
	Fan Motor Full Load Amperage	A	0.19
	Fan Motor Type		DC Motor
	Airflow Rate at Cooling, Dry	CFM	265–310–385–455
	Airflow Rate at Cooling, Wet	CFM	215–255–320–375
	Airflow Rate at Heating, Dry	CFM	265–310–385–455
	Sound Pressure Level [Cooling]	dB[A]	34–39–44–48
	Sound Pressure Level [Heating]	dB[A]	34–37–40–43
	Drain Pipe Size	In. [mm]	5/8 [16]
	Condensate Lift Mechanism, Maximum Distance	In. [mm]	19-11/16 [850]
	Coating on Heat Exchanger		—
	External Finish Color		White Munsell 0.7PB 9.2/0.4
	Unit Dimensions	W x D x H: In. [mm]	35-23/64 x 9-11/32 x 11-25/32 [898 x 237 x 299]
	Package Dimensions	W x D x H: In. [mm]	38-3/16 x 13-25/64 x 14-11/64 [970 x 340 x 360]
	Unit Weight	Lbs. [kg]	28 [12.7]
	Package Weight	Lbs. [kg]	32 [14.5]
Indoor Unit Operating Temperature Range	Cooling Intake Air Temp [Maximum / Minimum]*	°F	90 DB, 73 WB / 66 DB, 59 WB
	Heating Intake Air Temp [Maximum / Minimum]	°F	82 DB / 50 DB
Outdoor Unit	MCA	A	11.0
	MOCP	A	28
	Fan Motor Full Load Amperage	A	0.5
	Airflow Rate [Cooling / Heating]	CFM	1590
	Refrigerant Control		LEV
	Defrost Method		Reverse Cycle
	Coating on Heat Exchanger		Blue Fin Coating (BS Model only)
	Sound Pressure Level, Cooling[1]	dB(A)	44
	Compressor Type		INVERTER-driven twin rotary
	Compressor Model		SNB130FQCMC-L1
	Compressor Rated Load Amps	A	7
	Compressor Locked Rotor Amps	A	12.0
	Compressor Oil [Type // Charge]	oz.	FV50S // 16
	External Finish Color		Ivory Munsell 3Y 7.8/1.1
	Base Pan Heater		N/A
	Unit Dimensions	W x D x H: In. [mm]	31-13/16 (2+7/16) x 11-13/16 x 24-13/16 [809 (+62) x 300 x 630]
	Package Dimensions	W x D x H: In. [mm]	37-1/16 x 16-3/16 x 27-7/16 [941 x 411 x 697]
	Unit Weight	Lbs. [kg]	99 [44]
	Package Weight	Lbs. [kg]	111 [50]
Outdoor Unit Operating Temperature Range	Cooling Air Temp [Maximum / Minimum]*	°F	115 DB / -40 DB
Refrigerant	Maximum Charge Quantity	Lbs, oz	4.0, 14.0
	Initial Charge Quantity	Ft. [m]	70.0 [21.0]
	Additional Refrigerant Charge Per Additional Piping Length	oz./Ft. [g/m]	0.1 [10]

NOTES:
AHRI Rated Conditions [1]Cooling (Indoor // Outdoor) °F 80 DB, 67 WB // 95 DB, 75 WB

Select high sensible versus high latent capacity mode via function setting mode 08, “Fan speed” (accessible through Touch MA, Deluxe MA, kumo touch and kumo cloud app control options):
- ”High ceiling” mode = high sensible capacity
  - » Mode 08, setting 3 (factory default)
- ”Standard” mode = high latent capacity
  - » Mode 08, setting 2

*Indoor/Outdoor Unit Operating Temperature Range (Cooling Air Temp [Maximum / Minimum]):
- Wind baffles required to operate below 23°F DB in cooling mode.
- Heat pump system with wind baffle: 0°F - 115°F.
- Refer to wind baffle documentation for further information.

**Outdoor Unit Operating Temperature Range (Cooling Thermal Lock-out / Re-start Temperatures; Heating Thermal Lock-out / Re-start Temperatures):
- System cuts out in heating mode to avoid thermistor error and automatically restarts at these temperatures.

© 2022 Mitsubishi Electric Trane HVAC US LLC. All rights reserved.

SPECIFICATIONS: PKA-A18LA & PUY-A18NKA7(-BS)

Piping	Gas Pipe Size O.D. [Flared]	In.[mm]	1/2 [12.7]
	Liquid Pipe Size O.D. [Flared]	In.[mm]	1/4 [6.35]
	Maximum Piping Length	Ft. [m]	165 [50]
	Maximum Height Difference	Ft. [m]	100 [30]
	Maximum Number of Bends		15

NOTES:
AHRI Rated Conditions [1]Cooling (Indoor // Outdoor) °F 80 DB, 67 WB // 95 DB, 75 WB

Select high sensible versus high latent capacity mode via function setting mode 08, “Fan speed” (accessible through Touch MA, Deluxe MA, kumo touch and kumo cloud app control options):
- ”High ceiling” mode = high sensible capacity
  - » Mode 08, setting 3 (factory default)
- “Standard” mode = high latent capacity
  - » Mode 08, setting 2

*Indoor/Outdoor Unit Operating Temperature Range (Cooling Air Temp [Maximum / Minimum]):
- Wind baffles required to operate below 23°F DB in cooling mode.
- Heat pump system with wind baffle: 0°F - 115°F.
- Refer to wind baffle documentation for further information.

**Outdoor Unit Operating Temperature Range (Cooling Thermal Lock-out / Re-start Temperatures; Heating Thermal Lock-out / Re-start Temperatures):
- System cuts out in heating mode to avoid thermistor error and automatically restarts at these temperatures.

© 2022 Mitsubishi Electric Trane HVAC US LLC. All rights reserved.

INDOOR UNIT ACCESSORIES: PKA-A18LA

Control Interface	3-Pin Connector	☐ PAC-715AD
	BACnet® and Modbus® Interface	☐ PAC-UKPRC001-CN-1
	IT Extender	☐ PAC-WHS01IE-E
	kumo station® for kumo cloud®	☐ PAC-WHS01HC-E
	Lockdown bracket for remote controller	☐ RCMKP1CB
	Thermostat Interface	☐ PAC-US444CN-1
	Thermostat Interface	☐ PAC-US445CN-1
	USNAP Adapter	☐ PAC-WHS01UP-E
	Wireless Interface for kumo cloud®	☐ PAC-USWHS002-WF-2
Remote Sensor	Flush Mount Remote Temperature Sensor	☐ PAC-USSEN002-FM-1
	Flush Mount Temperature Sensor	☐ PAC-USSEN001-FM-1
	Remote Temperature Sensor	☐ PAC-SE41TS-E
	Wireless temperature and humitity sensor for kumo cloud®	☐ PAC-USWHS003-TH-1
Wired Remote Controller	Deluxe Wired MA Remote Controller†	☐ PAR-40MAAU
	Simple MA Remote Controller†	☐ PAC-YT53CRAU-J
	Touch MA Controller†	☐ PAR-CT01MAU-SB
Wireless Remote Controller	kumo touch™ RedLINK™ Wireless Controller	☐ MHK2
	Wireless MA Remote Controller	☐ PAR-FL32MA-E
Condensate	Blue Diamond (Advanced) Mini Condensate Pump w/ Reservoir & Sensor (208/230V) [recommended]	☐ X87-721
	Blue Diamond (MicroBlue) Mini Condensate Pump (110/208/230V) up to 18,000 BTU/H	☐ X86-003
	Blue Diamond Sensor Extension Cable — 15 Ft.	☐ C13-103
	Drain Pan Level Sensor/Control	☐ SS610E
	Fascia Kit for MicroBlue Pump, mounts the MicroBlue and sensor directly beneath indoor unit	☐ T18-016
	Refco Condensate Pump (100-240 VAC) up to 120,000 BTU/H	☐ COMBI
	Refco Condensate Pump (100-240 VAC) up to 120,000 BTU/H	☐ GOBI-II
	Sauermann Condensate Pump	☐ SI30-230
Disconnect Switch	(30A/600V/UL) [fits 2” X 4” utility box] - Black	☐ TAZ-MS303
	(30A/600V/UL) [fits 2” X 4” utility box] - White	☐ TAZ-MS303W
Drain Hose	Flexible Mini-Split Drain Hose	☐ DRX-16
Lineset	100’ x 1/4” x 100’ / 1/2” Lineset (Twin-Tube Insulation)	☐ MLS141212T-100
	15’ x 1/4” x 15’ / 1/2” Lineset (Twin-Tube Insulation)	☐ MLS141212T-15
	30’ x 1/4” x 30’ / 1/2” Lineset (Twin-Tube Insulation)	☐ MLS141212T-30
	50’ x 1/4” x 50’ / 1/2” Lineset (Twin-Tube Insulation)	☐ MLS141212T-50
	65’ x 1/4” x 65’ / 1/2” Lineset (Twin-Tube Insulation)	☐ MLS141212T-65

© 2022 Mitsubishi Electric Trane HVAC US LLC. All rights reserved.

OUTDOOR UNIT ACCESSORIES: PUY-A18NKA7(-BS)

Air Outlet Guide	Air Outlet Guide	☐ PAC-SJ07SG-E
Centralized Drain Pan	Centralized Drain Pan	☐ PAC-SG63DP-E
	Drain Pan	☐ PAC-SG64DP-E
Control/Service Tool	Control/Service Tool	☐ PAC-SK52ST
	M- & P-Series Maintenance Tool Cable Set	☐ M21EC0397
	USB/UART Conversion Cable (Required for all laptop connection)	☐ M21EC1397
Drain Socket	Drain Socket	☐ MAC-871DS
Hail Guards	Hail Guard	☐ HG-A5
M-NET Converter	M-NET Converter	☐ PAC-SJ96MA-E
Mini-Split Wire	14 Gauge, 4 wire MiniSplit Cable—250 ft. roll	☐ S144-250
	14 Gauge, 4 wire MiniSplit Cable—50 ft. roll	☐ S144-50
	16 Gauge, 4 wire MiniSplit Cable—250 ft. roll	☐ S164-250
	16 Gauge, 4 wire MiniSplit Cable—50 ft. roll	☐ S164-50
Mounting Pad	Condensing Unit Mounting Pad: 16” x 36” x 3”	☐ ULTRILITE1
Stand	18” Single Fan Stand	☐ QSMS1801M
	24” Single Fan Stand	☐ QSMS2401M
	Condenser Wall Bracket	☐ QSWB2000M-1
	Condenser Wall Bracket - Stainless Steel Finish	☐ QSWBSS
	Outdoor Unit Stand — 12” High	☐ QSMS1201M
Wind Baffle	Front Wind Baffle	☐ WB-PA4
	Rear Wind Baffle	☐ WB-RE4
	Side Advanced Wind Baffle	☐ WB-SD4

© 2022 Mitsubishi Electric Trane HVAC US LLC. All rights reserved.

INDOOR UNIT DIMENSIONS: PKA-A18LA

Unit: inch (mm)

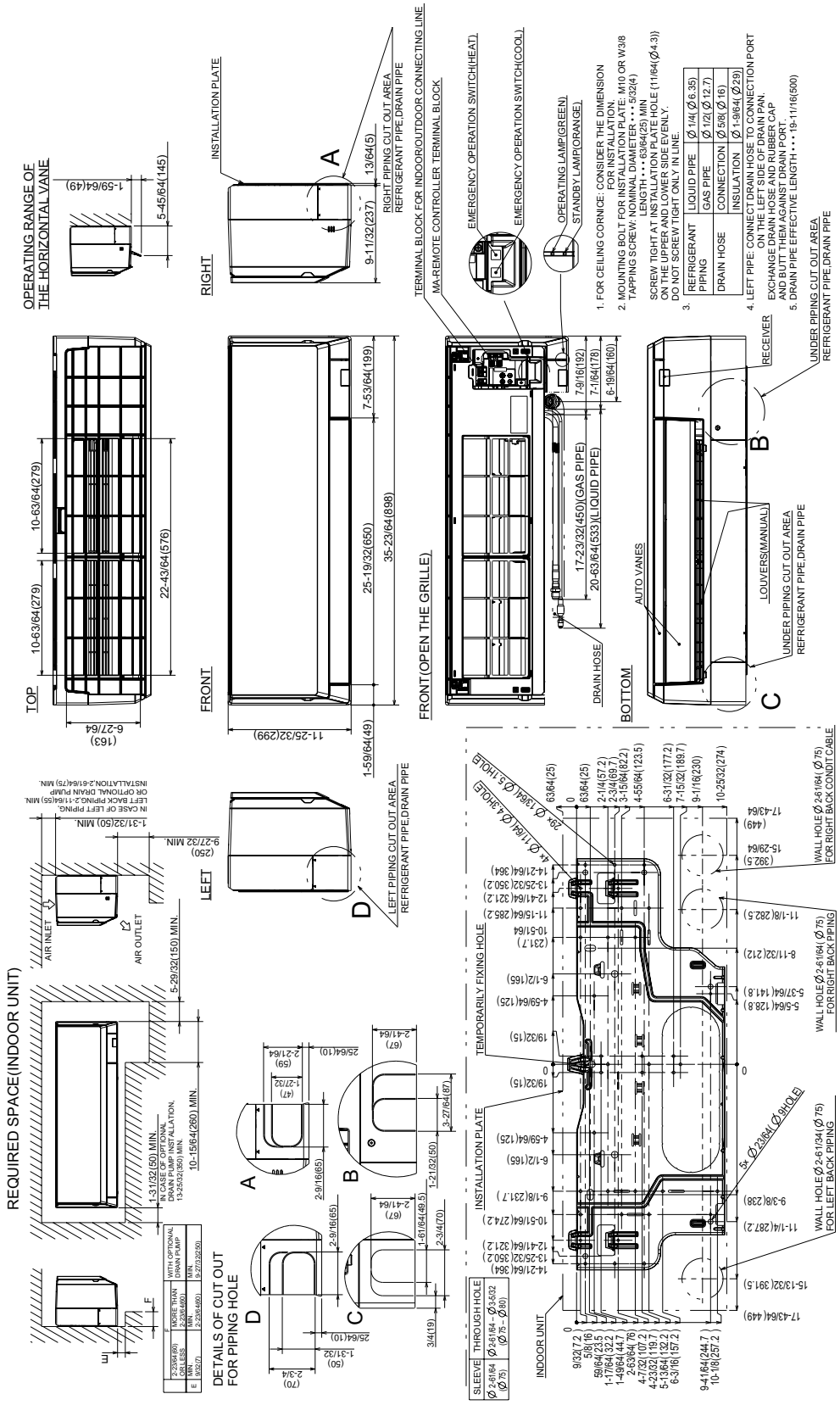

© 2022 Mitsubishi Electric Trane HVAC US LLC. All rights reserved.

OUTDOOR UNIT DIMENSIONS: PUY-A18NKA7(-BS)

Unit: mm<in>

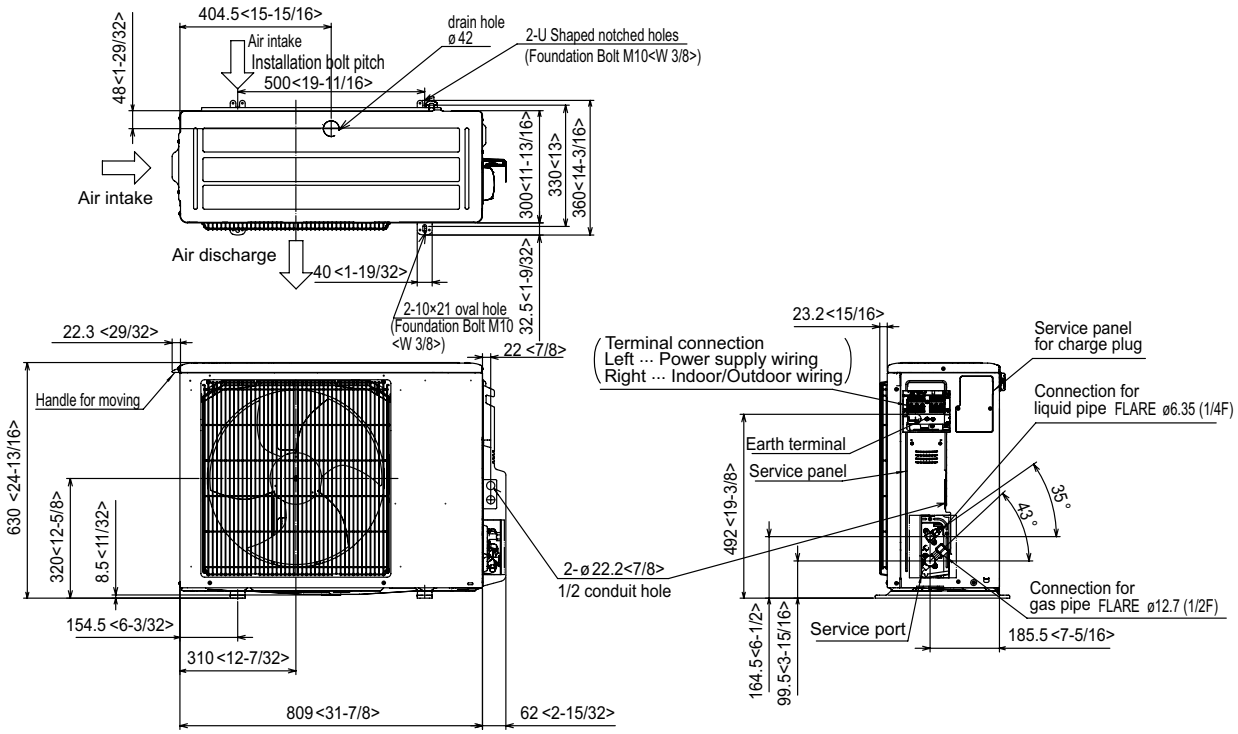

Free space around the outdoor unit (basic example)

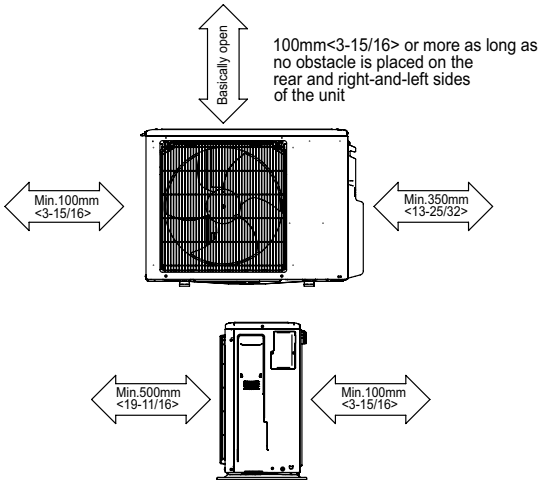

2 sides should be open in
the right, left and rear side.

FOUNDATION BOLTS

Please secure the unit firmly
with 4 foundation (M10<W3/8>) bolts.
(Bolts, washers and nut must
be purchased locally).

<Foundation bolt height>

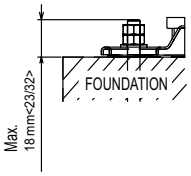

PIPING-WIRING DIRECTION

Piping and wiring connection can
be made from the rear direction only.

1340 Satellite Boulevard Suwanee, GA 30024
Toll Free: 800-433-4822 www.mehvac.com

FORM# PKA-A18LA & PUY-A18NKA7(-BS) - 202210

© 2022 Mitsubishi Electric Trane HVAC US LLC. All rights reserved.

PKA-A24KA7 & PUY-A24NHA7-BS
24,000 BTU/H COOLING ONLY OUTDOOR
24,000 BTU/H WALL-MOUNTED INDOOR UNIT

Job Name:

System Reference: Date:

Indoor Unit.....PKA-A24KA7

Outdoor Unit.....PUY-A24NHA7-BS

INDOOR UNIT FEATURES
- Sleek, compact design
- Simple installation
- Vane setting for air flow direction control
- Auto fan speed mode
- Ideal for spaces such as server rooms, daycare centers, classrooms, churches, small offices, and more
- Multiple control options available:
  - kumo cloud® smart device app for remote access
  - Third-party interface options
  - Wired or wireless controllers

OUTDOOR UNIT FEATURES
- Variable speed INVERTER-driven compressor
- Power receiver pre-charged with refrigerant volume for piping length up to 70 ft
- Low ambient cooling down to -40°F providing 100% capacity (with wind baffles)
- 24-hour continuous operation (cooling mode)
- High pressure protection
- Fast restart
- Superior energy and operational efficiency
- Seacoast protection on heat exchanger and base panel (rated for 2,000 hours in accordance with ASTM B117 testing)

© 2022 Mitsubishi Electric Trane HVAC US LLC. All rights reserved.

SPECIFICATIONS: PKA-A24KA7 & PUY-A24NHA7-BS

Cooling at 95°F[1]	Maximum Capacity	BTU/H	24,000
	Rated Capacity	BTU/H	24,000
	Minimum Capacity	BTU/H	10,000
	Maximum Power Input	W	1,960
	Rated Power Input	W	1,960
	Moisture Removal	Pints/h	5.0
	Sensible Heat Factor		0.77
	Power Factor [208V / 230V]	%	95.7 / 95.7
Efficiency	SEER		21.4
	EER[1]		12.2
	ENERGY STAR® Certified		No
Electrical	Voltage, Phase, Frequency		208/230, 1, 60
	Guaranteed Voltage Range	V AC	198 - 253
	Voltage: Indoor - Outdoor, S1-S2	V AC	208/230
	Voltage: Indoor - Outdoor, S2-S3	V DC	24
	Short-circuit Current Rating [SCCR]	kA	5
	Recommended Fuse/Breaker Size (Oudoor)	A	25
	Recommended Wire Size [Indoor - Outdoor]	AWG	14
	Power Supply		Indoor unit is powered by the outdoor unit
Indoor Unit	MCA	A	1.0
	Fan Motor Full Load Amperage	A	0.36
	Fan Motor Type		DC Motor
	Airflow Rate at Cooling, Dry	CFM	635–705–775
	Airflow Rate at Cooling, Wet	CFM	570–635–700
	Airflow Rate at Heating, Dry	CFM	635–705–775
	Sound Pressure Level [Cooling]	dB[A]	39–42–45
	Sound Pressure Level [Heating]	dB[A]	39–42–45
	Drain Pipe Size	In. [mm]	5/8 [16]
	Coating on Heat Exchanger		—
	External Finish Color		White Munsell 1.0Y 9.2/0.2
	Unit Dimensions	W x D x H: In. [mm]	46-1/16 x 11-5/8 x 14-3/8 [1,170 x 295 x 365]
	Package Dimensions	W x D x H: In. [mm]	51 x 14-1/4 x 18-1/2 [1,295 x 362 x 470]
	Unit Weight	Lbs. [kg]	46 [21]
	Package Weight	Lbs. [kg]	53 [24]
Indoor Unit Operating Temperature Range	Cooling Intake Air Temp [Maximum / Minimum]*	°F	90 DB, 72 WB / 66 DB, 61 WB
	Heating Intake Air Temp [Maximum / Minimum]	°F	77 DB / 59 DB
Outdoor Unit	MCA	A	19.0
	MOCP	A	26
	Fan Motor Full Load Amperage	A	0.4
	Fan Motor Output	W	86
	Airflow Rate [Cooling / Heating]	CFM	1940
	Refrigerant Control		LEV
	Defrost Method		Reverse Cycle
	Coating on Heat Exchanger		Blue Fin Coating (BS Model only)
	Sound Pressure Level, Cooling[1]	dB(A)	47
	Compressor Type		INVERTER-driven twin rotary
	Compressor Model		SNB172FWHM1
	Compressor Rated Load Amps	A	7
	Compressor Locked Rotor Amps	A	11.0
	Compressor Oil [Type // Charge]	oz.	FV50S // 23
	External Finish Color		Ivory Munsell 3Y 7.8/1.1
	Base Pan Heater		N/A
	Unit Dimensions	W x D x H: In. [mm]	37-13/32 x 13 (+1-3/16) x 37-1/8 [950 x 330 (+30) x 943]
	Package Dimensions	W x D x H: In. [mm]	40-15/16 x 17-11/16 x 40-11/16 [1040 x 450 x 1033]
	Unit Weight	Lbs. [kg]	151 [68]
	Package Weight	Lbs. [kg]	176 [80]
Outdoor Unit Operating Temperature Range	Cooling Air Temp [Maximum / Minimum]*	°F	115 DB / -40 DB
Refrigerant	Maximum Charge Quantity	Lbs, oz	7.0, 11.0
	Initial Charge Quantity	Ft. [m]	70.0 [20.0]
	Additional Refrigerant Charge Per Additional Piping Length	oz./Ft. [g/m]	0.3 [22.5]
Piping	Gas Pipe Size O.D. [Flared]	In.[mm]	5/8 [15.88]
	Liquid Pipe Size O.D. [Flared]	In.[mm]	3/8 [9.52]
	Maximum Piping Length	Ft. [m]	225 [68]
	Maximum Height Difference	Ft. [m]	100 [30]
	Maximum Number of Bends		10

NOTES:
AHRI Rated Conditions
(Rated data is determined at a fixed compressor speed) [1]Cooling (Indoor // Outdoor) °F 80 DB, 67 WB // 95 DB, 75 WB

*Indoor/Outdoor Unit Operating Temperature Range (Cooling Air Temp [Maximum / Minimum]):
- Wind baffles required to operate below 23°F DB in cooling mode.
- Cooling-only system with advanced wind baffle: -40°F - 115°F.
- Refer to wind baffle documentation for further information.

**Outdoor Unit Operating Temperature Range (Cooling Thermal Lock-out / Re-start Temperatures; Heating Thermal Lock-out / Re-start Temperatures):
- System cuts out in heating mode to avoid thermistor error and automatically restarts at these temperatures.

© 2022 Mitsubishi Electric Trane HVAC US LLC. All rights reserved.

INDOOR UNIT ACCESSORIES: PKA-A24KA7

Control Interface	3-Pin Connector	☐ PAC-715AD
	BACnet® and Modbus® Interface	☐ PAC-UKPRC001-CN-1
	IT Extender	☐ PAC-WHS01IE-E
	kumo station® for kumo cloud®	☐ PAC-WHS01HC-E
	Lockdown bracket for remote controller	☐ RCMKP1CB
	Thermostat Interface	☐ PAC-US444CN-1
	Thermostat Interface	☐ PAC-US445CN-1
	USNAP Adapter	☐ PAC-WHS01UP-E
	Wireless Interface for kumo cloud®	☐ PAC-USWHS002-WF-2
Remote Sensor	Flush Mount Remote Temperature Sensor	☐ PAC-USSEN002-FM-1
	Flush Mount Temperature Sensor	☐ PAC-USSEN001-FM-1
	Remote Temperature Sensor	☐ PAC-SE41TS-E
	Wireless temperature and humitity sensor for kumo cloud®	☐ PAC-USWHS003-TH-1
Wired Remote Controller	Deluxe Wired MA Remote Controller†	☐ PAR-40MAAU
	Simple MA Remote Controller†	☐ PAC-YT53CRAU-J
	Touch MA Controller†	☐ PAR-CT01MAU-SB
Wireless Remote Controller	kumo touch™ RedLINK™ Wireless Controller	☐ MHK2
	Wireless MA Receiver	☐ PAR-FA32MA-W
	Wireless MA Remote Controller	☐ PAR-FL32MA-E
Condensate	Blue Diamond (Advanced) Mini Condensate Pump w/ Reservoir & Sensor (208/230V) [recommended]	☐ X87-721
	Blue Diamond (MegaBlue Advanced) Condensate Pump w/ Reservoir & Sensor	☐ X87-835
	Blue Diamond Sensor Extension Cable — 15 Ft.	☐ C13-103
	Drain Pan Level Sensor/Control	☐ SS610E
	Refco Condensate Pump (100-240 VAC)	☐ GOBI-II
	Refco Condensate Pump (100-240 VAC) up to 120,000 BTU/H	☐ COMBI
	Sauermann Condensate Pump	☐ SI30-230
Disconnect Switch	(30A/600V/UL) [fits 2” X 4” utility box] - Black	☐ TAZ-MS303
	(30A/600V/UL) [fits 2” X 4” utility box] - White	☐ TAZ-MS303W
Drain Hose	Flexible Mini-Split Drain Hose	☐ DRX-16
Lineset	10’ x 3/8” x 10’ x 5/8” Lineset (Twin-Tube Insulation)††	☐ MPLS385812T-10
	100’ x 3/8” x 100’ x 5/8” Lineset (Twin-Tube Insulation)††	☐ MPLS385812T-100
	15’ x 3/8” x 15’ x 5/8” Lineset (Twin-Tube Insulation)††	☐ MPLS385812T-15
	30’ x 3/8” x 30’ x 5/8” Lineset (Twin-Tube Insulation)††	☐ MPLS385812T-30
	50’ x 3/8” x 50’ x 5/8” Lineset (Twin-Tube Insulation)††	☐ MPLS385812T-50
	65’ x 3/8” x 65’ x 5/8” Lineset (Twin-Tube Insulation)††	☐ MPLS385812T-65

© 2022 Mitsubishi Electric Trane HVAC US LLC. All rights reserved.

OUTDOOR UNIT ACCESSORIES: PUY-A24NHA7-BS

Air Outlet Guide	Air Outlet Guide (1 Piece)	☐ PAC-SG59SG-E
Centralized Drain Pan	Centralized Drain Pan	☐ PAC-SG63DP-E
	Drain Pan	☐ PAC-SG64DP-E
Control/Service Tool	Control/Service Tool	☐ PAC-SK52ST
	M- & P-Series Maintenance Tool Cable Set	☐ M21EC0397
	USB/UART Conversion Cable (Required for all laptop connection)	☐ M21EC1397
Distribution pipe	Twinning Distribution Pipe (50:50)††	☐ MSDD-50TR-E
Hail Guards	Hail Guard	☐ HG-A6
Lineset	10' x 3/8" x 10' x 5/8" Lineset (Twin-Tube Insulation)††	☐ MPLS385812T-10
	100' x 3/8" x 100' x 5/8" Lineset (Twin-Tube Insulation)††	☐ MPLS385812T-100
	15' x 3/8" x 15' x 5/8" Lineset (Twin-Tube Insulation)††	☐ MPLS385812T-15
	30' x 3/8" x 30' x 5/8" Lineset (Twin-Tube Insulation)††	☐ MPLS385812T-30
	50' x 3/8" x 50' x 5/8" Lineset (Twin-Tube Insulation)††	☐ MPLS385812T-50
	65' x 3/8" x 65' x 5/8" Lineset (Twin-Tube Insulation)††	☐ MPLS385812T-65
M-NET Converter	M-NET Converter	☐ PAC-SJ85MA-E
	M-NET Converter	☐ PAC-SJ95MA-E
Mounting Pad	Condensing Unit Mounting Pad: 24" x 42" x 3"	☐ ULTRILITE2
Stand	18" Single Fan Stand	☐ QSMS1801M
	24" Single Fan Stand	☐ QSMS2401M
	Condenser Wall Bracket	☐ QSWB2000M-1
	Condenser Wall Bracket - Stainless Steel Finish	☐ QSWBSS
	Outdoor Unit Stand — 12" High	☐ QSMS1201M
Wind Baffle	Front Wind Baffle	☐ WB-PA5
	Rear Wind Baffle	☐ WB-RE5
	Side Advanced Wind Baffle	☐ WB-SD5

© 2022 Mitsubishi Electric Trane HVAC US LLC. All rights reserved.

INDOOR UNIT DIMENSIONS: PKA-A24KA7

Unit: inch (mm)

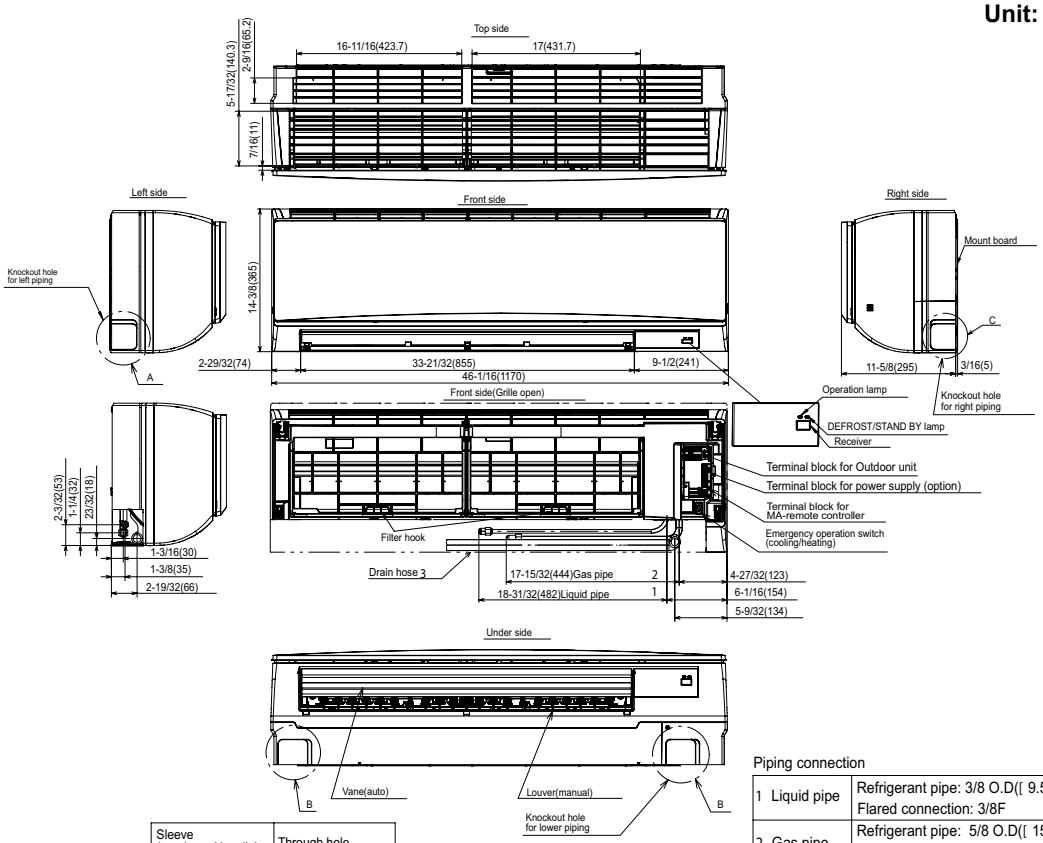

Sleeve (purchased locally)	Through hole
[2-15/16 ([75)	[2-15/16~[3-5/32 ([75~[80)

Piping connection

1 Liquid pipe	Refrigerant pipe: 3/8 O.D([9.52) Flared connection: 3/8F
2 Gas pipe	Refrigerant pipe: 5/8 O.D([15.88) Flared connection: 5/8F
3 Drain hose	5/8([16) O.D Effective length: 23-1/32 (585)

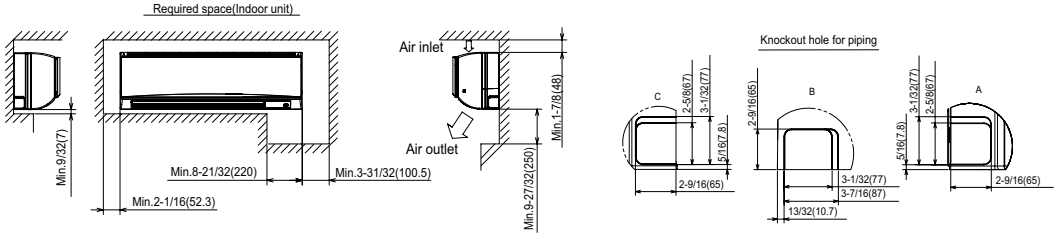

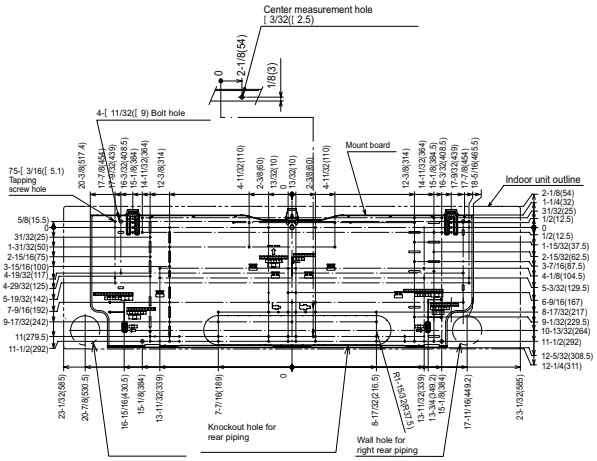

© 2022 Mitsubishi Electric Trane HVAC US LLC. All rights reserved.

OUTDOOR UNIT DIMENSIONS: PUY-A24NHA7-BS

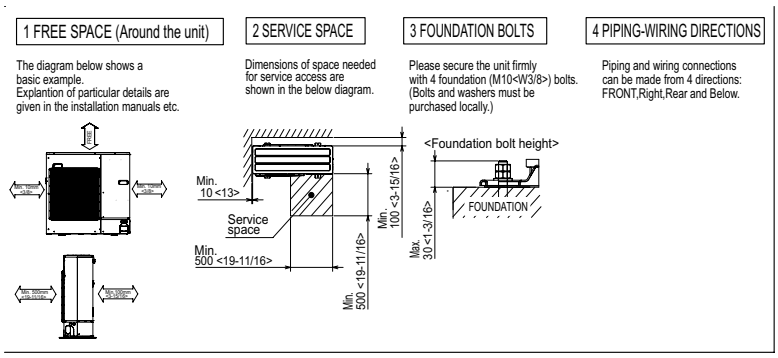

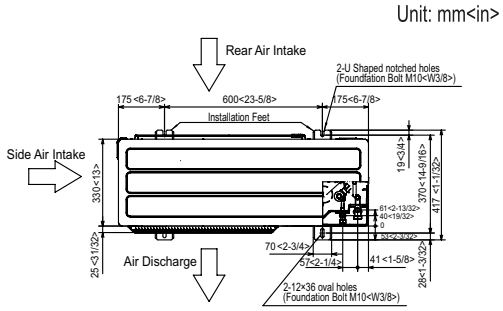

Example of Notes

① ··· Refrigerant GAS pipe connection (FLARE) ø15.88(5/8F)
② ··· Refrigerant LIQUID pipe connection (FLARE) ø 9.52(3/8F)
*1··· Indication of STOP VALVE connection location.

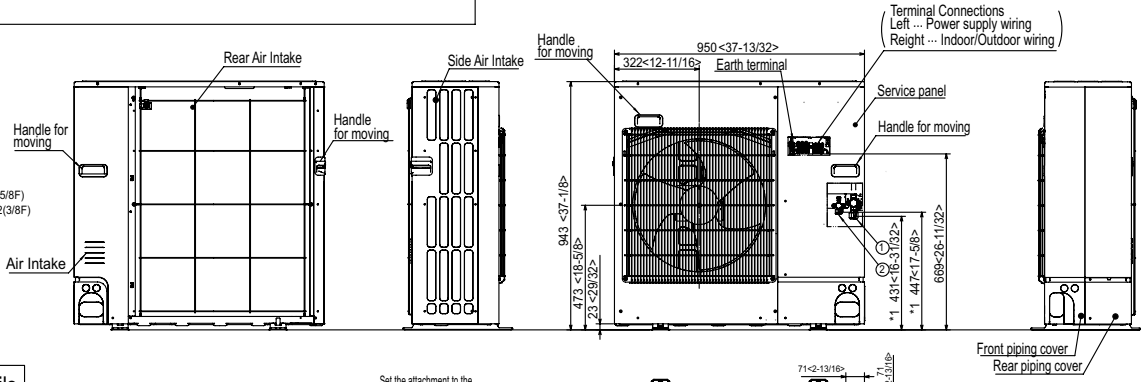

Piping knockout Hole Details

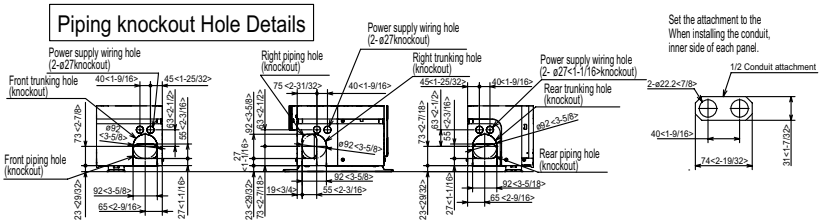

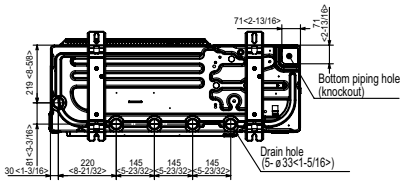

1340 Satellite Boulevard Suwanee, GA 30024
Toll Free: 800-433-4822 www.mehvac.com

FORM# PKA-A24KA7 & PUY-A24NHA7-BS - 202211

© 2022 Mitsubishi Electric Trane HVAC US LLC. All rights reserved.

PKA-A24KA7 & PUZ-HA24NHA1
24,000 BTU/H WALL-MOUNTED INDOOR UNIT
24,000 BTU/H HYPER-HEATING UNIVERSAL OUTDOOR

Job Name:

System Reference: Date:

Indoor Unit PKA-A24KA7

Outdoor Unit PUZ-HA24NHA1

INDOOR UNIT FEATURES
- Sleek, compact design
- Simple installation
- Vane setting for air flow direction control
- Auto fan speed mode
- Ideal for spaces such as server rooms, daycare centers, classrooms, churches, small offices, and more
- Multiple control options available:
  - kumo cloud® smart device app for remote access
  - Third-party interface options
  - Wired or wireless controllers

OUTDOOR UNIT FEATURES
- Variable speed INVERTER-driven compressor
- Wide heating range: heating performance down to -13°F (average of 80% heating capacity)
- High speed heating at start up: Hyper-Heating INVERTER® reduces the time for heating at start up by about half compared to standard models
- Pre-charged with refrigerant volume for piping length up to 70 ft.
- High pressure/temperature protection
- Built-in base pan heater

© 2023 Mitsubishi Electric Trane HVAC US LLC. All rights reserved.

SPECIFICATIONS: PKA-A24KA7 & PUZ-HA24NHA1

Cooling at 95°F[1]	Maximum Capacity	BTU/H	24,000
	Rated Capacity	BTU/H	24,000
	Minimum Capacity	BTU/H	10,000
	Maximum Power Input	W	1,900
	Rated Power Input	W	1,900
	Moisture Removal	Pints/h	5.0
	Sensible Heat Factor		0.77
	Power Factor [208V / 230V]	%	96.0 / 96.0
Heating at 47°F[2]	Maximum Capacity	BTU/H	28,000
	Rated Capacity	BTU/H	26,000
	Minimum Capacity	BTU/H	10,000
	Maximum Power Input	W	2,150
	Rated Power Input	W	1,920
	Power Factor [208V / 230V]	%	96.0 / 96.0
Heating at 17°F[3]	Maximum Capacity	BTU/H	26,000
	Rated Capacity	BTU/H	17,200
	Maximum Power Input	W	3,560
	Rated Power Input	W	2,006
Heating at 5°F[4]	Maximum Capacity	BTU/H	26,000
	Maximum Power Input	W	3,986
Heating at -13°F[7]	Maximum Capacity	BTU/H	20,800
Efficiency	SEER2		19.5
	EER2[1]		12.6
	HSPF2 [IV]		9.5
	COP at 47°F[2]		3.96
	COP at 17°F at Maximum Capacity[3]		2.1
	COP at 5°F at Maximum Capacity[4]		1.9
Electrical	Voltage, Phase, Frequency		208/230, 1, 60
	Guaranteed Voltage Range	V AC	198 - 253
	Voltage: Indoor - Outdoor, S1-S2	V AC	208/230
	Voltage: Indoor - Outdoor, S2-S3	V DC	24
	Short-circuit Current Rating [SCCR]	kA	5
	Recommended Fuse/Breaker Size (Oudoor)	A	25
	Recommended Wire Size [Indoor - Outdoor]	AWG	14
	Power Supply		Indoor unit is powered by the outdoor unit
Indoor Unit	MCA	A	1.0
	Fan Motor Full Load Amperage	A	0.36
	Fan Motor Type		DC Motor
	Airflow Rate at Cooling, Dry	CFM	635–705–775
	Airflow Rate at Cooling, Wet	CFM	570–635–700
	Airflow Rate at Heating, Dry	CFM	635–705–775
	Sound Pressure Level [Cooling]	dB[A]	39–42–45
	Sound Pressure Level [Heating]	dB[A]	39–42–45
	Drain Pipe Size	In. [mm]	5/8 [16]
	Coating on Heat Exchanger		—
	External Finish Color		White Munsell 1.0Y 9.2/0.2
	Unit Dimensions	W x D x H: In. [mm]	46-1/16 x 11-5/8 x 14-3/8 [1,170 x 295 x 365]
	Package Dimensions	W x D x H: In. [mm]	51 x 14-1/4 x 18-1/2 [1,295 x 362 x 470]
	Unit Weight	Lbs. [kg]	46 [21]
	Package Weight	Lbs. [kg]	53 [24]
Indoor Unit Operating Temperature Range	Cooling Intake Air Temp [Maximum / Minimum]*	°F	90 DB, 72 WB / 66 DB, 61 WB
	Heating Intake Air Temp [Maximum / Minimum]	°F	77 DB / 59 DB

NOTES:

AHRI Rated Conditions (Rated data is determined at a fixed compressor speed)	[1]Cooling (Indoor // Outdoor)	°F	80 DB, 67 WB // 95 DB, 75 WB
	[2]Heating at 47°F (Indoor // Outdoor)	°F	70 DB, 60 WB // 47 DB, 43 WB
	[3]Heating at 17°F (Indoor // Outdoor)	°F	70 DB, 60 WB // 17 DB, 15 WB
Conditions	[4]Heating at 5°F (Indoor // Outdoor)	°F	70 DB, 60 WB // 5 DB, 4 WB
	[7]Heating at -13°F (Indoor // Outdoor)	°F	70 DB, 60 WB // -13 DB, -14 WB

* Indoor/Outdoor Unit Operating Temperature Range (Cooling Air Temp [Maximum / Minimum]):
- Wind baffles required to operate below 23°F DB in cooling mode.
- Refer to wind baffle documentation for further information.

**Outdoor Unit Operating Temperature Range (Cooling Thermal Lock-out / Re-start Temperatures; Heating Thermal Lock-out / Re-start Temperatures):
- System cuts out in heating mode to avoid thermistor error and automatically restarts at these temperatures.

© 2023 Mitsubishi Electric Trane HVAC US LLC. All rights reserved.

SPECIFICATIONS: PKA-A24KA7 & PUZ-HA24NHA1

Outdoor Unit	MCA	A	17.0
	MOCP	A	27
	Fan Motor Output	W	74
	Airflow Rate [Cooling / Heating]	CFM	1940 / 1940
	Refrigerant Control		LEV
	Defrost Method		Reverse Cycle
	Sound Pressure Level, Cooling[1]	dB(A)	52
	Sound Pressure Level, Heating[2]	dB(A)	53
	Compressor Type		Scroll
	Compressor Model		DNB28FBAMT
	Compressor Rated Load Amps	A	9
	Compressor Locked Rotor Amps	A	18.0
	Compressor Oil [Type // Charge]	oz.	FVC68D // 34
	External Finish Color		Ivory Munsell 3Y 7.8/1.1
	Base Pan Heater		Built-in
	Unit Dimensions	W x D x H: In. [mm]	37-13/32 x 14-3/16 x 37-1/8 [950 x 360 x 943]
	Package Dimensions	W x D x H: In. [mm]	41 x 18 x 41 [1040 x 450 x 1033]
	Unit Weight	Lbs. [kg]	190 [86]
	Package Weight	Lbs. [kg]	210 [95]
Outdoor Unit Operating Temperature Range	Cooling Air Temp [Maximum / Minimum]*	°F	115 DB / 0 DB
	Heating Air Temp [Maximum / Minimum]	°F	70 DB, 59 WB / -13 DB, -13 WB
	Heating Thermal Lock-out / Re-start Temperatures**	°F	-22 / -13
Refrigerant	Type		R410A
	Pre-Charged Refrigerant Amount	Lbs, oz	7.0, 11.0
	Maximum Pre-Charged Piping Length	Ft. [m]	70.0 [21.0]
	Additional Refrigerant Charge Per Additional Piping Length	oz./Ft. [g/m]	0.7 [65]
Piping	Gas Pipe Size O.D. [Flared]	In.[mm]	5/8 [15.88]
	Liquid Pipe Size O.D. [Flared]	In.[mm]	3/8 [9.52]
	Maximum Piping Length	Ft. [m]	165 [50]
	Maximum Height Difference	Ft. [m]	100 [30]
	Maximum Number of Bends		15

NOTES:

AHRI Rated Conditions (Rated data is determined at a fixed compressor speed)	[1]Cooling (Indoor // Outdoor)	°F	80 DB, 67 WB // 95 DB, 75 WB
	[2]Heating at 47°F (Indoor // Outdoor)	°F	70 DB, 60 WB // 47 DB, 43 WB
	[3]Heating at 17°F (Indoor // Outdoor)	°F	70 DB, 60 WB // 17 DB, 15 WB
Conditions	[4]Heating at 5°F (Indoor // Outdoor)	°F	70 DB, 60 WB // 5 DB, 4 WB
	[7]Heating at -13°F (Indoor // Outdoor)	°F	70 DB, 60 WB // -13 DB, -14 WB

* Indoor/Outdoor Unit Operating Temperature Range (Cooling Air Temp [Maximum / Minimum]):
- Wind baffles required to operate below 23°F DB in cooling mode.
- Refer to wind baffle documentation for further information.

**Outdoor Unit Operating Temperature Range (Cooling Thermal Lock-out / Re-start Temperatures; Heating Thermal Lock-out / Re-start Temperatures):
- System cuts out in heating mode to avoid thermistor error and automatically restarts at these temperatures.

© 2023 Mitsubishi Electric Trane HVAC US LLC. All rights reserved.

INDOOR UNIT ACCESSORIES: PKA-A24KA7

Control Interface	3-Pin Connector	☐ PAC-715AD
	IT Extender	☐ PAC-WHS01IE-E
	kumo station® for kumo cloud®	☐ PAC-WHS01HC-E
	Procon BACnet® and Modbus® Interface	☐ PAC-UKPRC001-CN-1
	Thermostat Interface	☐ PAC-US444CN-1
	Thermostat Interface	☐ PAC-US445CN-1
	USNAP Adapter	☐ PAC-WHS01UP-E
	Wireless Interface for kumo cloud®	☐ PAC-USWHS002-WF-2
Remote Sensor	Flush Mount Remote Temperature Sensor	☐ PAC-USSEN002-FM-1
	Flush Mount Temperature Sensor	☐ PAC-USSEN001-FM-1
	Remote Temperature Sensor	☐ PAC-SE41TS-E
	Wireless temperature and humidity sensor for kumo cloud®	☐ PAC-USWHS003-TH-1
Wired Remote Controller	Deluxe Wired MA Remote Controller†	☐ PAR-40MAAU
	Simple Ductless Wired Remote Controller	☐ PAC-SDW01RC-1
	Simple MA Remote Controller†	☐ PAC-YT53CRAU-J
	Touch MA Controller†	☐ PAR-CT01MAU-SB
Wireless Remote Controller	kumo touch™ RedLINK™ Wireless Controller	☐ MHK2
	Lockdown bracket for remote controller	☐ RCMKP1CB
	Wireless MA Receiver	☐ PAR-FA32MA-W
	Wireless MA Remote Controller	☐ PAR-FL32MA-E
Condensate	Blue Diamond (Advanced) Mini Condensate Pump w/ Reservoir & Sensor (208/230V) [recommended]	☐ X87-721
	Blue Diamond (MegaBlue Advanced) Condensate Pump w/ Reservoir & Sensor	☐ X87-835
	Drain Pan Level Sensor/Control	☐ SS610E
	Refco Condensate Pump (100-240 VAC)	☐ GOBI-II
	Refco Condensate Pump (100-240 VAC) up to 120,000 BTU/H	☐ COMBI
Disconnect Switch	(30A/600V/UL) [fits 2” X 4” utility box] - Black	☐ TAZ-MS303
Lineset	10’ x 3/8” x 10’ x 5/8” Lineset (Twin-Tube Insulation)	☐ MPLS385812T-10
	100’ x 3/8” x 100’ x 5/8” Lineset (Twin-Tube Insulation)	☐ MPLS385812T-100
	15’ x 3/8” x 15’ x 5/8” Lineset (Twin-Tube Insulation)	☐ MPLS385812T-15
	30’ x 3/8” x 30’ x 5/8” Lineset (Twin-Tube Insulation)	☐ MPLS385812T-30
	50’ x 3/8” x 50’ x 5/8” Lineset (Twin-Tube Insulation)	☐ MPLS385812T-50
	65’ x 3/8” x 65’ x 5/8” Lineset (Twin-Tube Insulation)	☐ MPLS385812T-65

© 2023 Mitsubishi Electric Trane HVAC US LLC. All rights reserved.

OUTDOOR UNIT ACCESSORIES: PUZ-HA24NHA1

Air Outlet Guide	Air Outlet Guide (1 Piece)	☐ PAC-SG59SG-E
Control/Service Tool	Control/Service Tool	☐ PAC-SK52ST
Hail Guards	Hail Guard	☐ HG-A6
M-NET Converter	M-NET Converter	☐ PAC-SJ85MA-E
	M-NET Converter	☐ PAC-SJ95MA-E
Mounting Pad	Condensing Unit Mounting Pad: 24” x 42” x 3”	☐ ULTRILITE2
Stand	18” Single Fan Stand	☐ QSMS1801M
	24” Single Fan Stand	☐ QSMS2401M
	Condenser Wall Bracket	☐ QSWB2000M-1
	Condenser Wall Bracket - Stainless Steel Finish	☐ QSWBSS
	Outdoor Unit Stand — 12” High	☐ QSMS1201M
Wind Baffle	Front Wind Baffle	☐ WB-PA5
	Rear Wind Baffle	☐ WB-RE5
	Side Advanced Wind Baffle	☐ WB-SD5

© 2023 Mitsubishi Electric Trane HVAC US LLC. All rights reserved.

INDOOR UNIT DIMENSIONS: PKA-A24KA7

Unit: inch (mm)

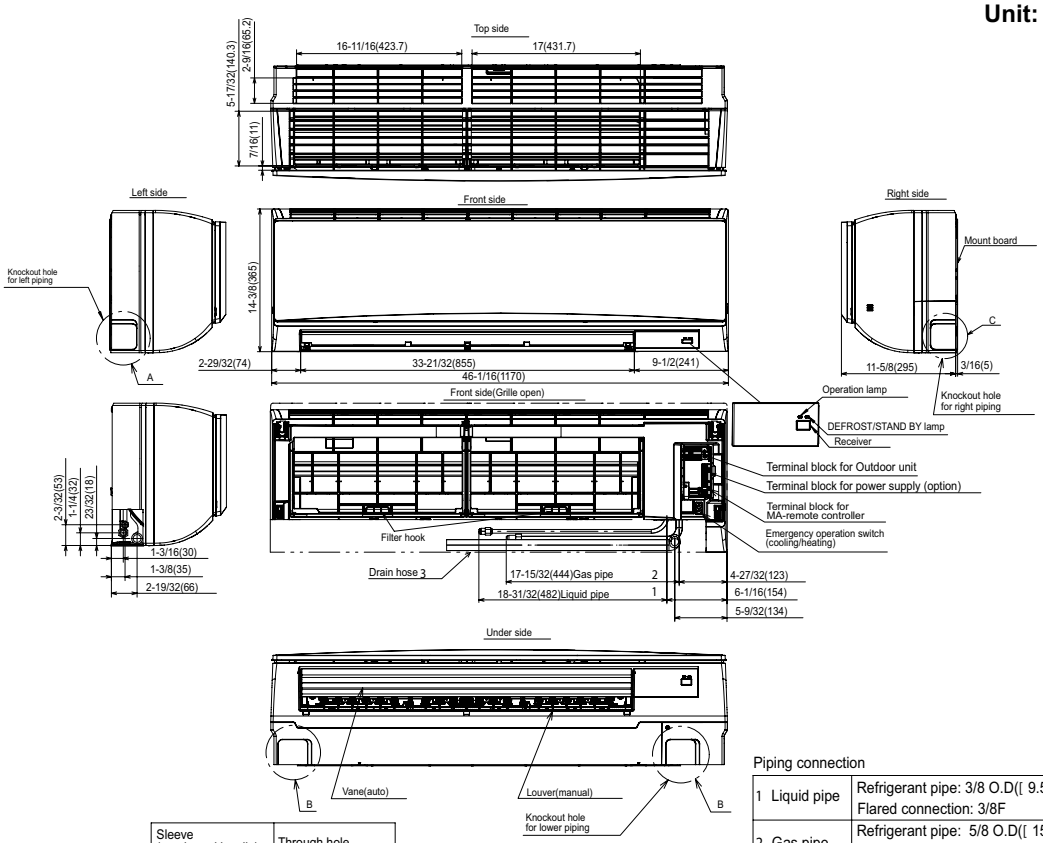

Sleeve (purchased locally)	Through hole
[2-15/16 ([75)	[2-15/16~[3-5/32 ([75~[80)

Piping connection

1 Liquid pipe	Refrigerant pipe: 3/8 O.D([9.52) Flared connection: 3/8F
2 Gas pipe	Refrigerant pipe: 5/8 O.D([15.88) Flared connection: 5/8F
3 Drain hose	5/8([16) O.D Effective length: 23-1/32 (585)

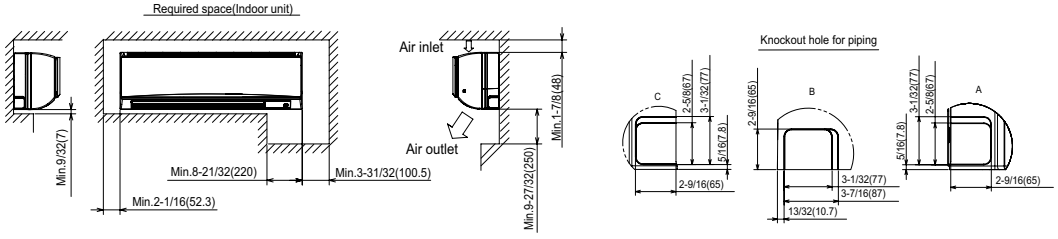

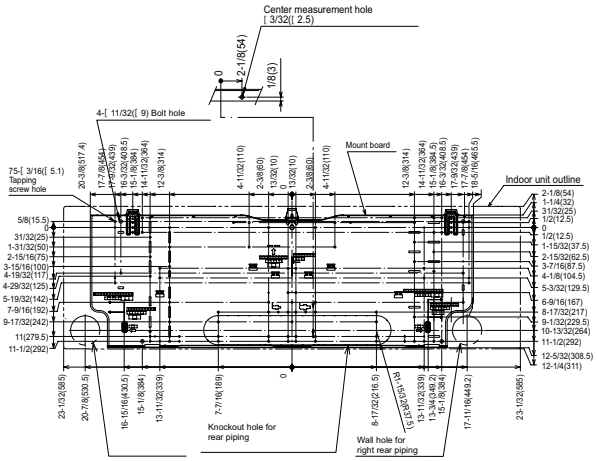

© 2023 Mitsubishi Electric Trane HVAC US LLC. All rights reserved.

OUTDOOR UNIT DIMENSIONS: PUZ-HA24NHA1

Unit: mm<in>

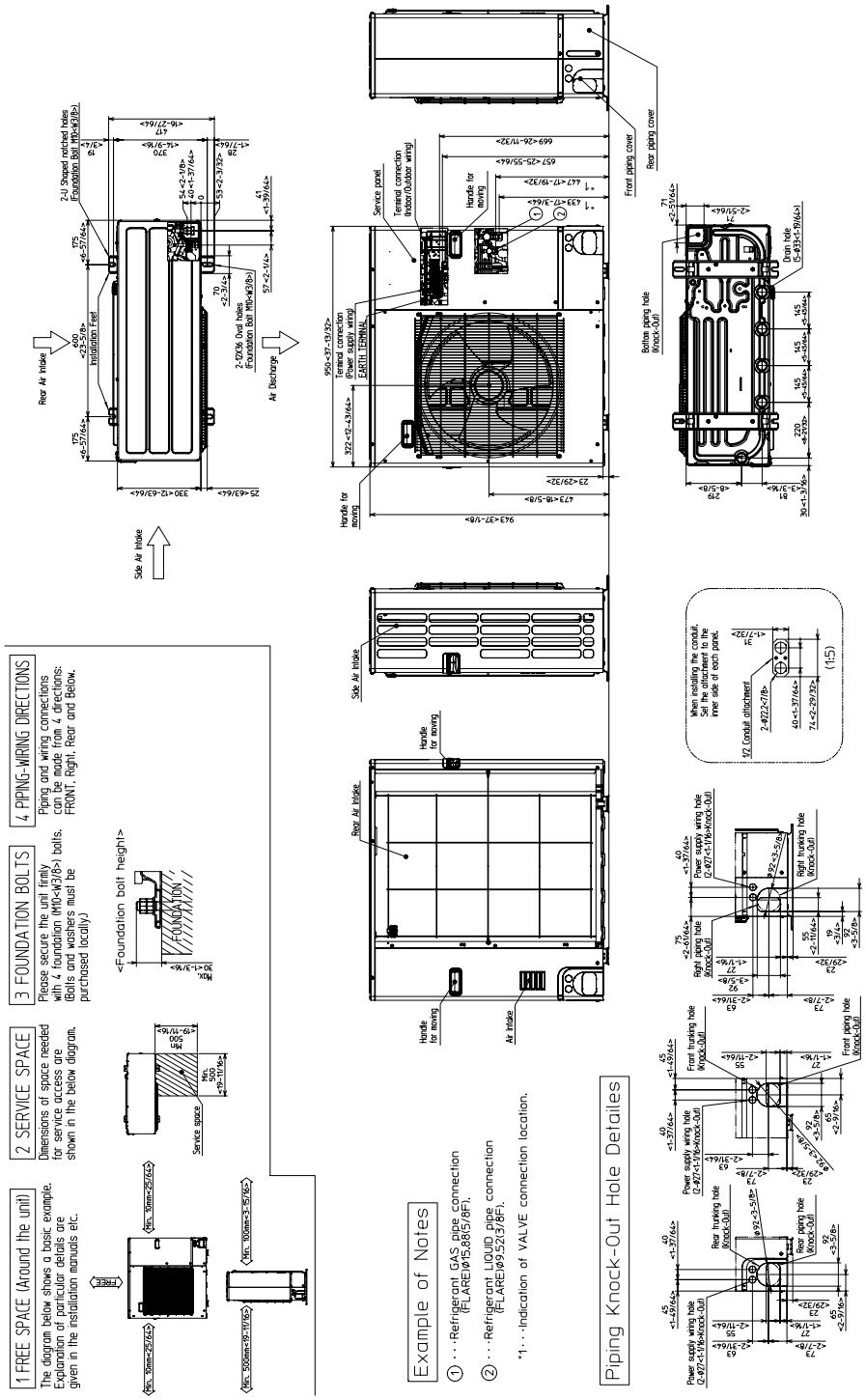

1340 Satellite Boulevard Suwanee, GA 30024
Toll Free: 800-433-4822 www.mehvac.com

FORM# PKA-A24KA7 & PUZ-HA24NHA1 - 202307

© 2023 Mitsubishi Electric Trane HVAC US LLC. All rights reserved.

CITYMULTI®

PANEL HEATER KITS FOR CITY MULTI OUTDOOR UNITS

DESIGNED FOR PURY-(E)PT/Y(S)NU-A(-BS), PURY-HP-T/Y(S)NU-A, PUHY-HP-T/Y(S)NU-A AND PUHY-(E)PT/Y(S)NU-A(-BS) SERIES UNITS

MITSUBISHI ELECTRIC

Job Name:

System Reference: Date:

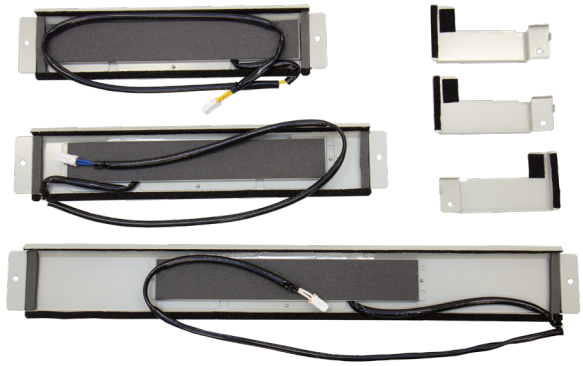

SPECIFICATIONS

Panel Heater Kit Number	Description	Rated Voltage	Power Input	Carton Weight (lbs)	Carton Dimensions L x W x H (in.)
PAC-PH01EHYU-E	Panel Heater Small Module	208/230 V	20W	11	5-15/16 x 33-7/8 x 7-7/8
PAC-PH02EHYU-E	Panel Heater Large Module	208/230 V	20W	13	5-15/16 x 33-7/8 x 7-7/8
PAC-PH03EHYU-E *	Panel Heater X-Large Module	208/230 V	20W	14	5-15/16 x 33-7/8 x 7-7/8
PAC-PH03EHYU-E1	Panel Heater EXL and XL Module	208/230 V	20W	10	5-15/16 x 33-7/8 x 7-7/8

* PAC-PH03EHYU-E Panel Heater is being replaced by the PAC-PH03EHYU-E1 Panel Heater to be used on XL and EXL modules.

GENERAL FEATURES

- Prevents ice from building up on the outdoor drain pan when operating in heating mode for an extended period of time.
- Operation of panel heaters is controlled by the outdoor unit
  - Energized when unit is in heating mode, compressor is running and outdoor temperatures drop below 39˚ F.
  - Connects to the wiring connector located in the side channel of the unit of all CITY MULTI Y-Series and R2-Series N-Generation modules.
- All Y-Series and R2-Series Hyper-heat models will come with heater panels pre-installed. There is no need for additional panel heater purchase or installation for these models.
- Designed to work with both 208/230V and 460V 3 phase units.

INSTALLATION NOTES

- Use of panel heaters is recommended when ambient temperatures are expected to stay below -1˚ F for periods longer than 72 hours.
- To prevent the possibility of freezing, outdoor units should not be installed directly on the ground. Follow the guidelines in the installation manual for outdoor mounting. Outdoor units should be raised 12 inches from the ground or annual snow fall line.
- A minimum distance of 1-3/16 inches is required between the sides of twinned units, even when using panel heaters. For ease of installation and serviceability, a minimum distance between units of 6 inches is recommended. If a distance of 15 inches between units is exceeded, extra wind guards maybe required.
- For additional information, see the panel heater installation manual.
- For further details on installation, refer to outdoor unit technical service manual.

Note: Panel heaters are effective only when used in conjunction with Snow Hoods and Snow / Hail Guards.

Specifications are subject to change without notice.

© 2021 Mitsubishi Electric Trane HVAC US LLC. All rights reserved.

PANEL HEATER COMPATIBILITY

PURY-P-T(S)NU-A(-BS) SERIES

Unit Model	Component Qty		
	PAC-PH01EHYU-E (For Small Module)	PAC-PH02EHYU-E (For L Module)	PAC-PH03EHYU-E1 (For XL & EXL Module)
PURY-P72(T,Y)NU-A(-BS)	1		
PURY-P96(T,Y)NU-A(-BS)		1	
PURY-P120(T,Y)NU-A(-BS)		1	
PURY-P144(T,Y)NU-A(-BS)		1	
PURY-P168(T,Y)NU-A(-BS)			1 *
PURY-P192(T,Y)SNU-A(-BS)		2	
PURY-P216(T,Y)SNU-A(-BS)		2	
PURY-P240(T,Y)SNU-A(-BS)		2	
PURY-P264(T,Y)SNU-A(-BS)		2	
PURY-P288(T,Y)SNU-A(-BS)		2	
PURY-P312(T,Y)SNU-A(-BS)		1	1 *
PURY-P336(T,Y)SNU-A(-BS)			2 *

* XL Panel Heater PAC-PH03EHYU-E can also be used for this application until inventory is depleted.

PURY-(E)P-T(S)NU-A(-BS) SERIES

Unit Model	Component Qty		
	PAC-PH01EHYU-E (For Small Module)	PAC-PH02EHYU-E (For L Module)	PAC-PH03EHYU-E1 (For XL & EXL Module)
PURY-EP72(T,Y)NU-A(-BS)	1		
PURY-EP96(T,Y)NU-A(-BS)		1	
PURY-EP120(T,Y)NU-A(-BS)		1	
PURY-EP144(T,Y)NU-A(-BS)		1	
PURY-EP168(T,Y)NU-A(-BS)			1 *
PURY-EP192(T,Y)NU-A(-BS)			1
PURY-EP192(T,Y)SNU-A(-BS)		2	
PURY-EP216(T,Y)NU-A(-BS)			1
PURY-EP216(T,Y)SNU-A(-BS)		2	
PURY-EP240(T,Y)NU-A(-BS)			1
PURY-EP240(T,Y)SNU-A(-BS)		2	
PURY-EP264(T,Y)SNU-A(-BS)		2	
PURY-EP288(T,Y)SNU-A(-BS)		2	
PURY-EP312(T,Y)SNU-A(-BS)		1	1 *
PURY-EP336(T,Y)SNU-A(-BS)			2 *
PURY-EP384(T,Y)SNU-A(-BS)			2
PURY-EP432(T,Y)SNU-A(-BS)			2

* XL Panel Heater PAC-PH03EHYU-E can also be used for this application until inventory is depleted.

PURY-HP-T(S)NU-A SERIES

*Hyper Heat units have Panel Heaters pre-installed. This chart is for reference only.

Unit Model	Component Qty		
	PAC-PH01EHYU-E (For Small Module)	PAC-PH02EHYU-E (For L Module)	PAC-PH03EHYU-E1 (For XL & EXL Module)
PURY-HP72(T,Y)NU-A		1	
PURY-HP96(T,Y)NU-A		1	
PURY-HP120(T,Y)NU-A		1	
PURY-HP144(T,Y)SNU-A		2	
PURY-HP192(T,Y)SNU-A		2	
PURY-HP240(T,Y)SNU-A		2	

© 2021 Mitsubishi Electric Trane HVAC US LLC. All rights reserved.

PANEL HEATER COMPATIBILITY

PUHY-P-T(S)NU-A(-BS) SERIES

Unit Model	Component Qty		
	PAC-PH01EHYU-E (For Small Module)	PAC-PH02EHYU-E (For L Module)	PAC-PH03EHYU-E1 (For XL & EXL Module)
PUHY-P72(T,Y)NU-A(-BS)	1		
PUHY-P96(T,Y)NU-A(-BS)		1	
PUHY-P120(T,Y)NU-A(-BS)		1	
PUHY-P144(T,Y)NU-A(-BS)		1	
PUHY-P168(T,Y)NU-A(-BS)			1 *
PUHY-P192(T,Y)SNU-A(-BS)		2	
PUHY-P216(T,Y)SNU-A(-BS)		2	
PUHY-P240(T,Y)SNU-A(-BS)		2	
PUHY-P264(T,Y)SNU-A(-BS)	1	2	
PUHY-P288(T,Y)SNU-A(-BS)	1	2	
PUHY-P312(T,Y)SNU-A(-BS)	1	2	
PUHY-P336(T,Y)SNU-A(-BS)		3	
PUHY-P360(T,Y)SNU-A(-BS)		3	
PUHY-P384(T,Y)SNU-A(-BS)		3	
PUHY-P408(T,Y)SNU-A(-BS)		3	
PUHY-P432(T,Y)SNU-A(-BS)		3	

* XL Panel Heater PAC-PH03EHYU-E can also be used for this application until inventory is depleted.

PUHY-(E)P-T(S)NU-A(-BS) SERIES

Unit Model	Component Qty		
	PAC-PH01EHYU-E (For Small Module)	PAC-PH02EHYU-E (For L Module)	PAC-PH03EHYU-E1 (For XL & EXL Module)
PUHY-EP72(T,Y)NU-A(-BS)	1		
PUHY-EP96(T,Y)NU-A(-BS)		1	
PUHY-EP120(T,Y)NU-A(-BS)		1	
PUHY-EP144(T,Y)NU-A(-BS)		1	
PUHY-EP168(T,Y)NU-A(-BS)			1 *
PUHY-EP192(T,Y)NU-A(-BS)			1 *
PUHY-EP192(T,Y)SNU-A(-BS)		2	
PUHY-EP216(T,Y)NU-A(-BS)			1
PUHY-EP216(T,Y)SNU-A(-BS)		2	
PUHY-EP240(T,Y)NU-A(-BS)			1
PUHY-EP240(T,Y)SNU-A(-BS)		2	
PUHY-EP264(T,Y)SNU-A(-BS)	1	2	
PUHY-EP288(T,Y)SNU-A(-BS)	1	2	
PUHY-EP312(T,Y)SNU-A(-BS)	1	2	
PUHY-EP336(T,Y)SNU-A(-BS)		3	
PUHY-EP360(T,Y)SNU-A(-BS)		3	
PUHY-EP384(T,Y)SNU-A(-BS)		3	
PUHY-EP408(T,Y)SNU-A(-BS)		3	
PUHY-EP432(T,Y)SNU-A(-BS)		3	

* XL Panel Heater PAC-PH03EHYU-E can also be used for this application until inventory is depleted.

PUHY-HP-T(S)NU-A SERIES

*Hyper Heat units have Panel Heaters pre-installed. This chart is for reference only.

Unit Model	Component Qty		
	PAC-PH01EHYU-E (For Small Module)	PAC-PH02EHYU-E (For L Module)	PAC-PH03EHYU-E1 (For XL & EXL Module)
PUHY-HP72(T,Y)NU-A		1	
PUHY-HP96(T,Y)NU-A		1	
PUHY-HP120(T,Y)NU-A		1	
PUHY-HP144(T,Y)SNU-A		2	
PUHY-HP192(T,Y)SNU-A		2	
PUHY-HP240(T,Y)SNU-A		2	

© 2021 Mitsubishi Electric Trane HVAC US LLC. All rights reserved.

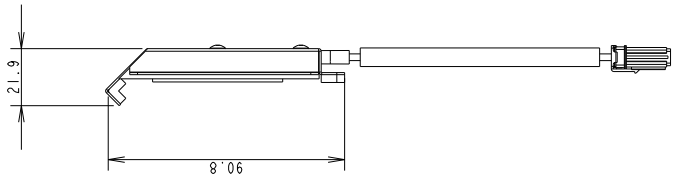

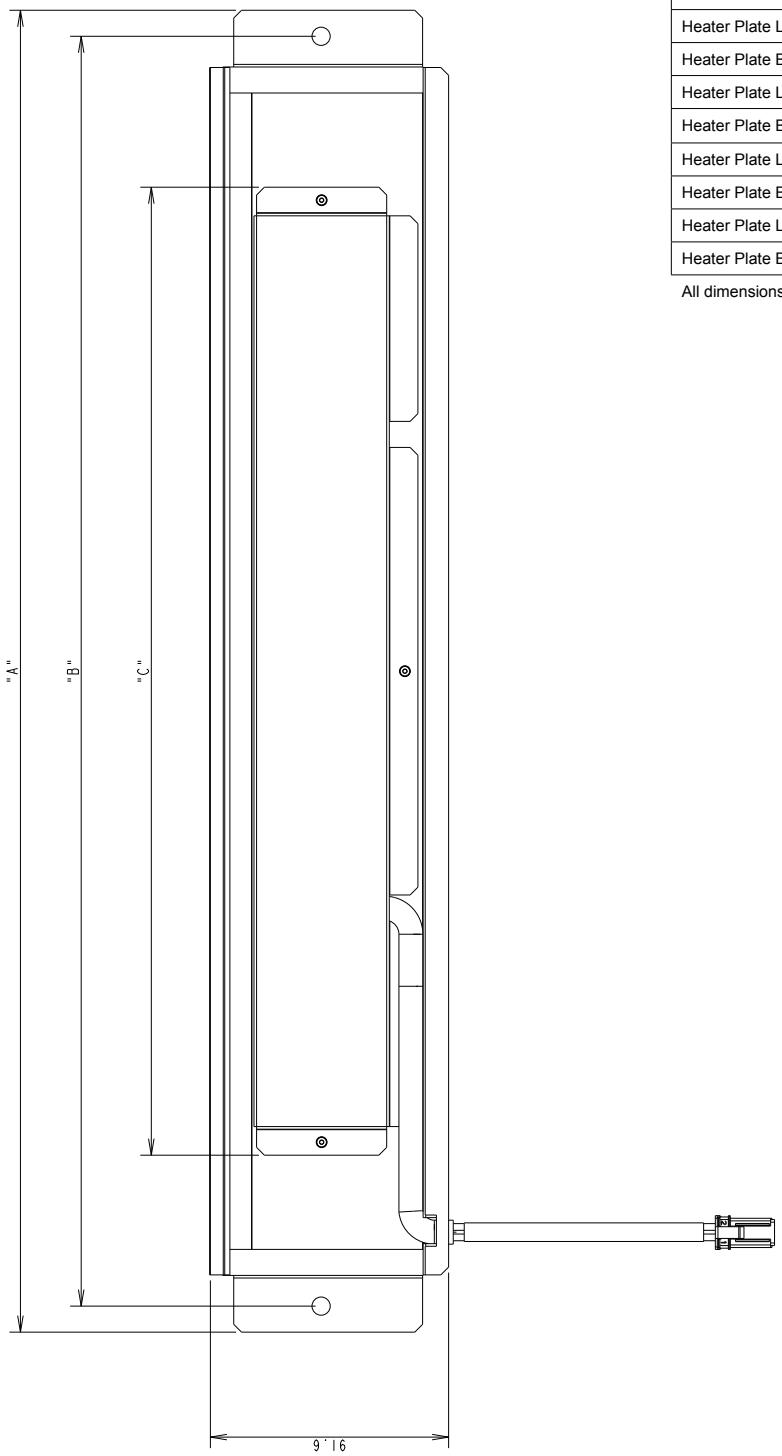

Name	Unit Type	"A"	"B"	"C"
Heater Plate Left	Small	394	374	325
Heater Plate Back	Small	705	685	350
Heater Plate Left	Large	394	374	325
Heater Plate Back Right	Large	508	488	350
Heater Plate Left	X-Large	394	374	325
Heater Plate Back Left	X-Large	763	743	350
Heater Plate Left	EXL	394	374	325
Heater Plate Back Left	EXL	763	743	350

All dimensions are in mm

© 2021 Mitsubishi Electric Trane HVAC US LLC. All rights reserved.

PAC-PH01EHYU-E, PAC-PH02EHYU-E, PAC-PH03EHYU-E, AND PAC-PH03EHYUE-1 INTERNAL AND EXTERNAL DIMENSIONS

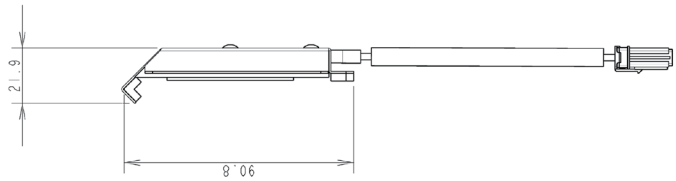

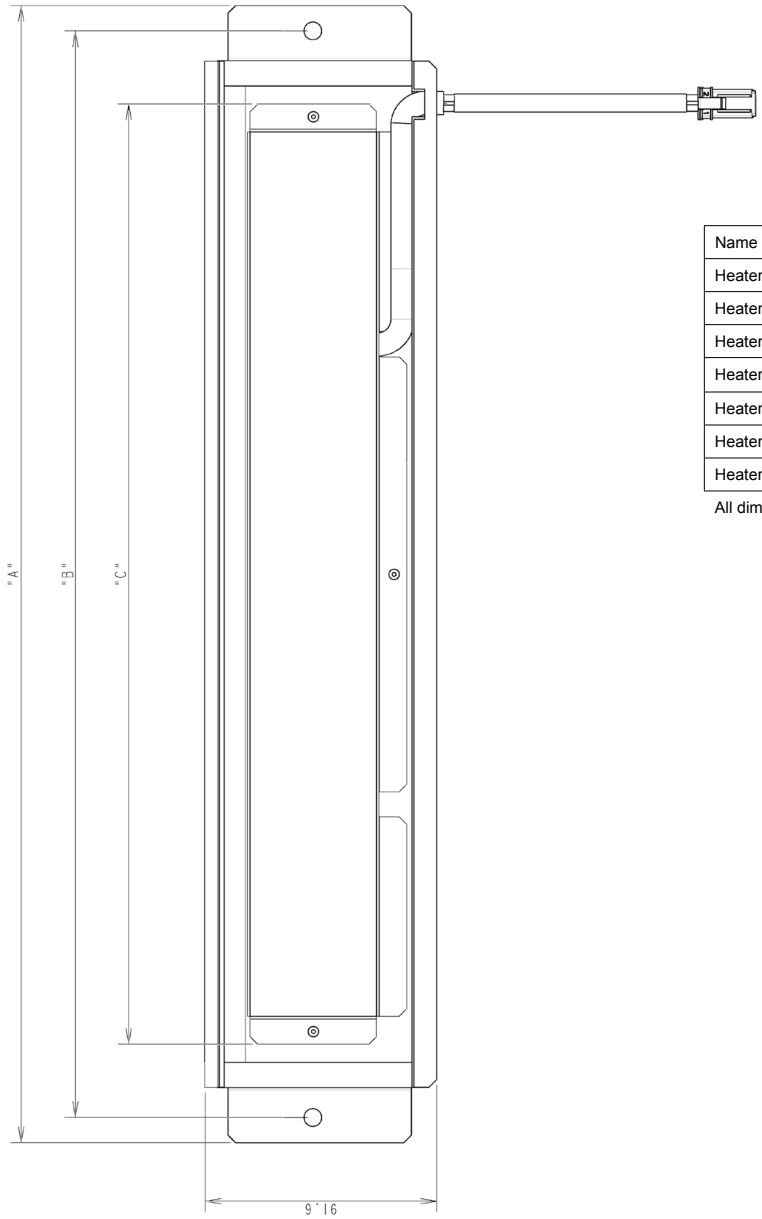

Name	Unit Type	"A"	"B"	"C"
Heater Plate Right	Small	469	449	350
Heater Plate Right	Large	469	449	350
Heater Plate Back Left	Large	450	430	350
Heater Plate Right	X-Large	446.5	426.5	350
Heater Plate Back Right	X-Large	763	743	350
Heater Plate Right	EXL	446.5	426.5	350
Heater Plate Back Right	EXL	763	743	350

All dimensions are in mm

1340 Satellite Boulevard. Suwanee, GA 30024
Toll Free: 800-433-4822 www.mehvac.com

FORM# M_SUBMITTAL_PANEL_HEATER_KITS - 202104

Specifications are subject to change without notice.

© 2021 Mitsubishi Electric Trane HVAC US LLC. All rights reserved.

CITYMULTI®

Snow/Hail Guards Kit for CITY MULTI© Modular Outdoor Units

Designed for PURY-(E)P-T/Y(S)NU-A(-BS), PUHY-(E)P-T/Y(S)NU-A(-BS), PURY-HP-T/Y(S)NU-A and PUHY-HP-T/Y(S)NU-A Series Units

MITSUBISHI ELECTRIC

Job Name:

System Reference: Date:

SGN SERIES

SGN-1
SGN-2
SGN-3

SGN-4
SGN-5

SHK-1 and SHN-1

GENERAL FEATURES

- Protects outdoor unit fan guard and coil surfaces from hail damage and snow build-up in severe climates
- 20-gauge, hot-dipped galvanized G-90 steel construction
- Heavy-duty polyester-based powder paint finish to match equipment
- SGN installs easily using existing wire guard fasteners
- SHK and SHN installs easily using existing fasteners and provided brackets and screws

NOTES:

- Outdoor unit must be mounted at least 12" off the ground or 12" above the highest average snow depth, whichever is greater
- For SGN clearances for the sides and back of the outdoor unit must be at least 9" greater than standard installation guidelines
- For best coil protection, two and three module units must be mounted with the minimum 1-3/16" separation
- If you exceed the 1-3/16" module separation listed above, additional SGN-1, SGN-2, SGN-3, SGN-4, and SGN-5 assemblies may be required or when installing Heater Panel Kits which requires reference back to the Heater Panel submittal for minimum clearance allowed
- For best snow and hail protection use SHK-1 or SHN-1 with SGN series snow/hail guards.

SPECIFICATIONS

Kit Number	Description	Net Weight (lbs.)	Ship Weight (lbs.)	Carton Dimensions
SGN-1	Side snow/hail guards (2 per kit) 25.1" wide (All ODUs)	31	35	3" H x 40" L x 23" W
SGN-2	Front and Rear snow/hail guard (2 per kit) 32" wide (Small and XL ODU)	37	41	3" H x 40" L x 23" W
SGN-3	Front and Rear snow/hail guard (2 per kit) 21.9" wide (Large ODU)	27	31	3" H x 40" L x 23" W
SGN-4	Side snow/hail guards (2 per kit) 25.25" wide (EXL ODU)	40	48	3" H x 57" L x 23" W
SGN-5	Rear snow/hail guard (2 per kit) 32.25" wide (EXL ODU)	50	58	3" H x 57" L x 23" W
SHK-1	Snow Hood for Snow/Hail Protection 33.38" wide (Small and XL ODU)	41	47	30-1/2" H x 34" L x 32" W
SHN-1	Snow Hood for Snow/Hail Protection 24.3" wide (Large ODU)	33	41	32" H x 33" L x 26-1/4" W

Specifications are subject to change without notice.

© 2020 Mitsubishi Electric Trane HVAC US LLC. All rights reserved.

COMPONENTS REQUIRED PER OUTDOOR UNIT

PURY-P-T(S)NU-A(-BS) SERIES

Unit model	Module Size				Component Qty						
	S	L	XL	EXL	SGN-1	SGN-2	SGN-3	SGN-4	SGN-5	SHK-1	SHN-1
PURY-P72(T,Y)NU-A(-BS)	1				1	1				1	
PURY-P96(T,Y)NU-A(-BS)		1			1		2				2
PURY-P120(T,Y)NU-A(-BS)		1			1		2				2
PURY-P144(T,Y)NU-A(-BS)		1			1		2				2
PURY-P168(T,Y)NU-A(-BS)			1		1	2				2	
PURY-P192(T,Y)SNU-A(-BS)		2			1		4				4
PURY-P216(T,Y)SNU-A(-BS)		2			1		4				4
PURY-P240(T,Y)SNU-A(-BS)		2			1		4				4
PURY-P264(T,Y)SNU-A(-BS)		2			1		4				4
PURY-P288(T,Y)SNU-A(-BS)		2			1		4				4
PURY-P312(T,Y)SNU-A(-BS)		1	1		1	2	2			2	2
PURY-P336(T,Y)SNU-A(-BS)			2		1	4				4	

PURY-(E)P-T(S)NU-A(-BS) SERIES

Unit model	Module Size				Component Qty						
	S	L	XL	EXL	SGN-1	SGN-2	SGN-3	SGN-4	SGN-5	SHK-1	SHN-1
PURY-EP72(T,Y)NU-A(-BS)	1				1	1				1	
PURY-EP96(T,Y)NU-A(-BS)		1			1		2				2
PURY-EP120(T,Y)NU-A(-BS)		1			1		2				2
PURY-EP144(T,Y)NU-A(-BS)		1			1		2				2
PURY-EP168(T,Y)NU-A(-BS)			1		1	2				2	
PURY-EP192(T,Y)NU-A(-BS)				1		1		1	1	2	
PURY-EP192(T,Y)SNU-A(-BS)		2			1		4				4
PURY-EP216(T,Y)NU-A(-BS)				1		1		1	1	2	
PURY-EP216(T,Y)SNU-A(-BS)		2			1		4				4
PURY-EP240(T,Y)NU-A(-BS)				1		1		1	1	2	
PURY-EP240(T,Y)SNU-A(-BS)		2			1		4				4
PURY-EP264(T,Y)SNU-A(-BS)		2			1		4				4
PURY-EP288(T,Y)SNU-A(-BS)		2			1		4				4
PURY-EP312(T,Y)SNU-A(-BS)		1	1		1	2	2			2	2
PURY-EP336(T,Y)SNU-A(-BS)			2		1	4				4	
PURY-EP384(T,Y)SNU-A(-BS)				2		2		1	2	4	
PURY-EP432(T,Y)SNU-A(-BS)				2		2		1	2	4	

PURY-HP-T(S)NU-A SERIES

Unit model	Module Size				Component Qty						
	S	L	XL	EXL	SGN-1	SGN-2	SGN-3	SGN-4	SGN-5	SHK-1	SHN-1
PURY-HP72(T,Y)NU-A		1			1		2				2
PURY-HP96(T,Y)NU-A		1			1		2				2
PURY-HP120(T,Y)NU-A		1			1		2				2
PURY-HP144(T,Y)SNU-A		2			1		4				4
PURY-HP192(T,Y)SNU-A		2			1		4				4
PURY-HP240(T,Y)SNU-A		2			1		4				4

Specifications are subject to change without notice.

© 2020 Mitsubishi Electric Trane HVAC US LLC. All rights reserved.

COMPONENTS, contd.

PUHY-P-T(S)NU-A(-BS) SERIES

Unit model	Module Size			Component Qty						
	S	L	XL	SGN-1	SGN-2	SGN-3			SHK-1	SHN-1
PUHY-P72(T,Y)NU-A(-BS)	1			1	1				1	
PUHY-P96(T,Y)NU-A(-BS)		1		1		2				2
PUHY-P120(T,Y)NU-A(-BS)		1		1		2				2
PUHY-P144(T,Y)NU-A(-BS)		1		1		2				2
PUHY-P168(T,Y)NU-A(-BS)			1	1	2				2	
PUHY-P192(T,Y)SNU-A(-BS)		2		1		4				4
PUHY-P216(T,Y)SNU-A(-BS)		2		1		4				4
PUHY-P240(T,Y)SNU-A(-BS)		2		1		4				4
PUHY-P264(T,Y)SNU-A(-BS)	1	2		1	1	4			1	4
PUHY-P288(T,Y)SNU-A(-BS)	1	2		1	1	4			1	4
PUHY-P312(T,Y)SNU-A(-BS)	1	2		1	1	4			1	4
PUHY-P336(T,Y)SNU-A(-BS)		3		1		6				6
PUHY-P360(T,Y)SNU-A(-BS)		3		1		6				6
PUHY-P384(T,Y)SNU-A(-BS)		3		1		6				6
PUHY-P408(T,Y)SNU-A(-BS)		3		1		6				6
PUHY-P432(T,Y)SNU-A(-BS)		3		1		6				6

PUHY-(E)P-T(S)NU-A(-BS) SERIES

Unit model	Module Size				Component Qty						
	S	L	XL	EXL	SGN-1	SGN-2	SGN-3	SGN-4	SGN-5	SHK-1	SHN-1
PUHY-EP72(T,Y)NU-A(-BS)	1				1	1				1	
PUHY-EP96(T,Y)NU-A(-BS)		1			1		2				2
PUHY-EP120(T,Y)NU-A(-BS)		1			1		2				2
PUHY-EP144(T,Y)NU-A(-BS)		1			1		2				2
PUHY-EP168(T,Y)NU-A(-BS)			1		1	2				2	
PUHY-EP192(T,Y)NU-A(-BS)			1		1	2				2	
PUHY-EP192(T,Y)SNU-A(-BS)		2			1		4				4
PUHY-EP216(T,Y)NU-A(-BS)				1		1		1	1	2	
PUHY-EP216(T,Y)SNU-A(-BS)		2			1		4				4
PUHY-EP240(T,Y)NU-A(-BS)				1		1		1	1	2	
PUHY-EP240(T,Y)SNU-A(-BS)		2			1		4				4
PUHY-EP264(T,Y)SNU-A(-BS)	1	2			1	1	4			1	4
PUHY-EP288(T,Y)SNU-A(-BS)	1	2			1	1	4			1	4
PUHY-EP312(T,Y)SNU-A(-BS)	1	2			1	1	4			1	4
PUHY-EP336(T,Y)SNU-A(-BS)		3			1		6				6
PUHY-EP360(T,Y)SNU-A(-BS)		3			1		6				6
PUHY-EP384(T,Y)SNU-A(-BS)		3			1		6				6
PUHY-EP408(T,Y)SNU-A(-BS)		3			1		6				6
PUHY-EP432(T,Y)SNU-A(-BS)		3			1		6				6

PUHY-HP-T(S)NU-A SERIES

Unit model	Module Size				Component Qty						
	S	L	XL	ELX	SGN-1	SGN-2	SGN-3	SGN-4	SGN-5	SHK-1	SHN-1
PUHY-HP72(T,Y)NU-A		1			1		2				2
PUHY-HP96(T,Y)NU-A		1			1		2				2
PUHY-HP120(T,Y)NU-A		1			1		2				2
PUHY-HP144(T,Y)SNU-A		2			1		4				4
PUHY-HP192(T,Y)SNU-A		2			1		4				4
PUHY-HP240(T,Y)SNU-A		2			1		4				4

Specifications are subject to change without notice.

© 2020 Mitsubishi Electric Trane HVAC US LLC. All rights reserved.

SGN-1, SGN-2, SGN-3, SGN-4, and SGN-5: EXTERNAL DIMENSIONS

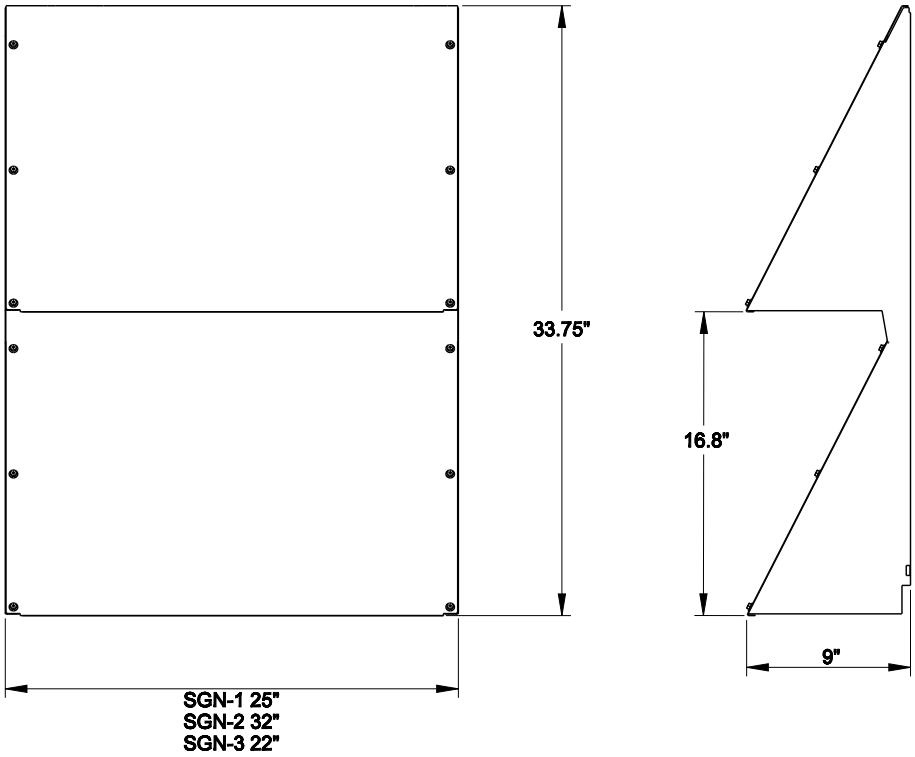

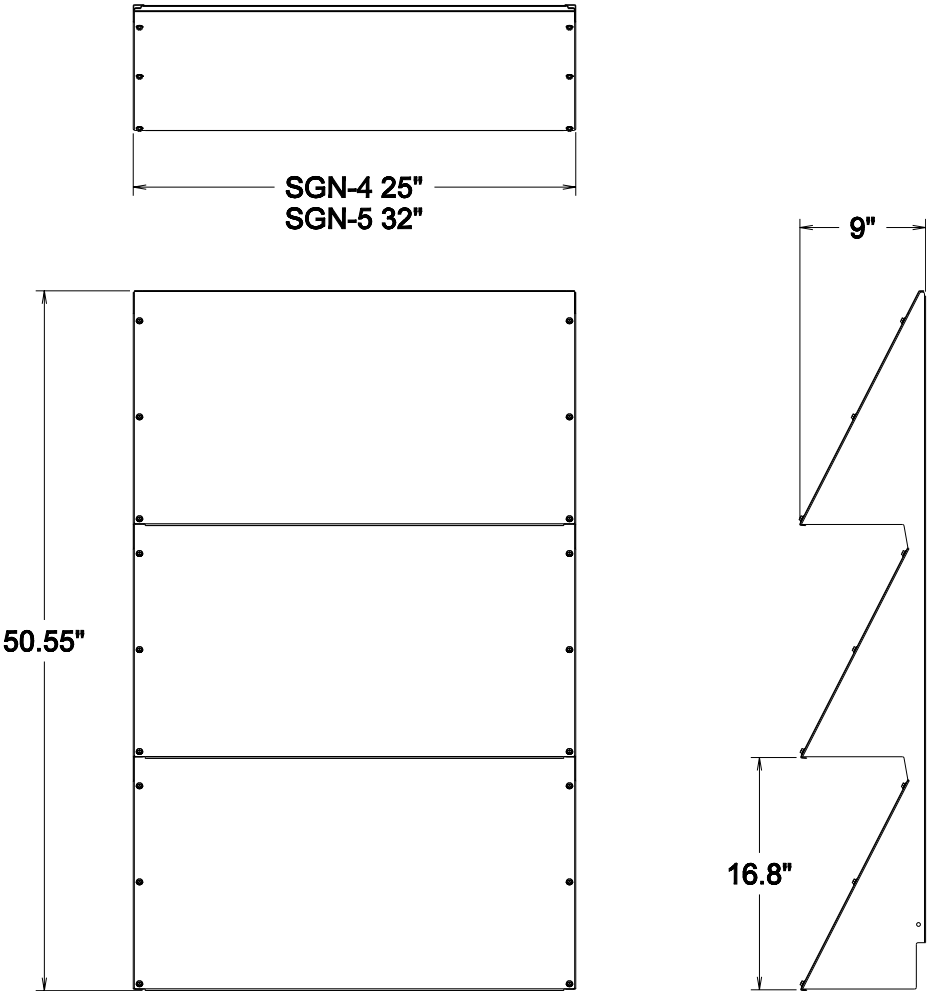

© 2020 Mitsubishi Electric Trane HVAC US LLC. All rights reserved.

EXTERNAL DIMENSIONS: SHK-1 and SHN-1

SHK-1

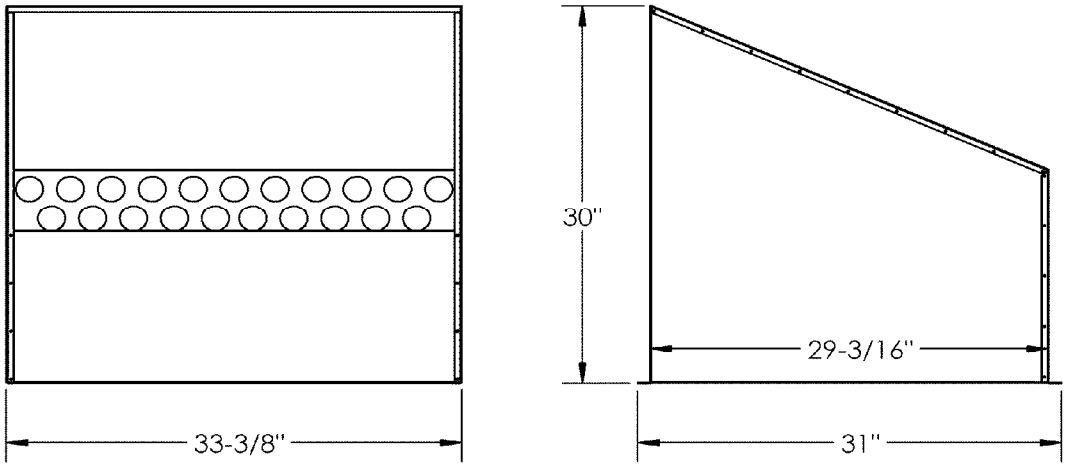

SHN-1

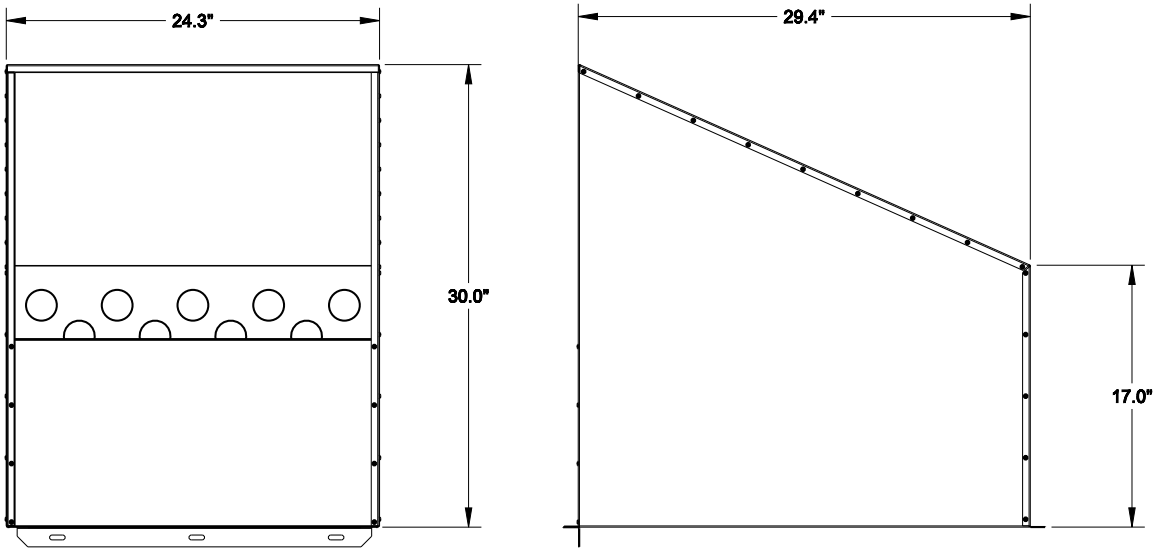

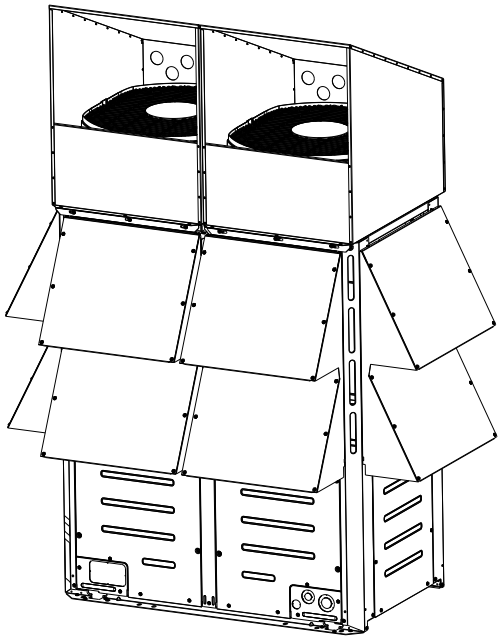

1340 Satellite Boulevard. Suwanee, GA 30024
Toll Free: 800-433-4822 www.mehvac.com

FORM# M_Submittal_Snow-Hood_Hail-Guard - 202010

Specifications are subject to change without notice.

© 2020 Mitsubishi Electric Trane HVAC US LLC. All rights reserved.

PAC-USSEN002-FM-1
Flush Mount Remote Temperature Sensor

MITSUBISHI ELECTRIC
HEATING & AIR CONDITIONING

Job Name:
System Reference: Date:

SPECIFICATIONS

- The Flush Mount Remote Temperature Sensor allows for remote sensing of space temperature up to 100 feet away from a Mitsubishi Electric indoor unit
- Dimensions (Sensor Head)
  - Ø0.74" sensor head x 0.65" length
  - Drywall requires a ½" hole to mount
  - Solid Walls require a ¼" hole to mount
- Operating temperature measurement Range:
  41 – 140°F (5 – 60°C)
- Relative Humidity: 0-100%, non-condensing
- Wiring: Uses non-polar control wire for connecting to the CN20 connection terminal on the indoor unit
- 22/2 AWG UL 1007 non-shielded wire
- Once installed, the sensor head is able to be painted

WHAT'S IN THE BOX

- Flush mount sensor lead with 24 inches of wire
- CN20 connector with noise filter board and 7.5 inches of wire
- Drywall Anchor

NOTE:

- PAC-USSEN002-FM-1 does not come with the conversion cable and is not compatible with the following indoor units:
  PEFY-NMHU, PFFY-NEMU and PFFY-NRMU

REQUIREMENTS

- Compatible Mitsubishi Electric Indoor Unit with CN20 connection.
  Please see compatibility chart for more information.

MOUNTING DIAGRAM

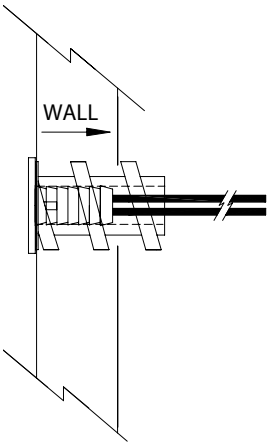

THERMISTOR

<Thermistor characteristic graph>

Thermistor for lower temperature	Room temperature detection thermistor (TH21) Pipe temperature detection thermistor/liquid (TH22) Pipe temperature detection thermistor/gas (TH23)

Thermistor R_0=15 kΩ ± 3%
Fixed number of B=3480 ± 2%

$$Rt=15\exp\left\{3480\left(\frac{1}{273+(t-32)/1.8}-\frac{1}{273}\right)\right\}$$

30°F	15.8 kΩ
50°F	9.6 kΩ
70°F	6.0 kΩ
80°F	4.8 kΩ
90°F	3.9 kΩ
100°F	3.2 kΩ

< Thermistor for lower temperature >

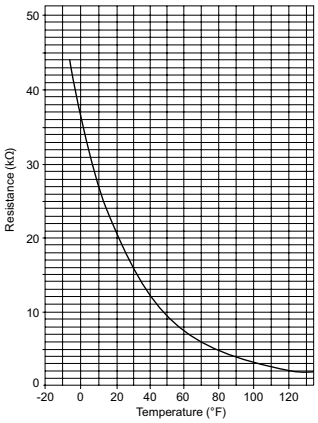

Specifications are subject to change without notice.

© 2022 Mitsubishi Electric Trane HVAC US LLC. All rights reserved.

Compatibility Chart

CITY MULTI®	
PMFY-NMBU	OK
PEFY-NMAU	OK
PEFY-NMHSU	OK
PEFY-NMHU[1]	NO
PEFY-NMLU	OK
PEFY-NMSU	OK
PLFY- NAMU	OK
PLFY- NBMU	OK
PLFY- NCMU	OK
PLFY-NEMU	OK
PLFY- NFMU	OK
PLFY- NLMU	OK
PCFY- VKM	OK
PCFY- NGMU	OK
PCFY- NKMU	OK
PFFY-NEMU[1]	NO
PFFY-NRMU[1]	NO
PVFY-E00	OK
PVFY-NAMU	OK
PKFY-NAMU	OK
PKFY-NFMU	OK
PKFY-NGMU	OK
PKFY-NBMU	OK
PKFY-NHMU	OK
PKFY-NKMU	OK

[1] Requires XA to XH Connector

P-Series	
PCA	OK
PEA	OK
PEAD	OK
PKA	OK
PLA	OK
PVA	OK

M-Series	
MFZ-KA	NO
MFZ-KJ	NO
MSZ/Y-A	NO
MSZ/Y-D	NO
MS-WA	NO
MSZ-FD	NO
MSZ-FE	NO
MSZ-FS	NO
MSZ-EF	NO
MSZ/Y-GE	NO
MSZ/Y-GL	NO
MSZ/Y-GS	NO
MSZ-FH	NO
MSZ-HE/HM	NO
MVZ	OK
SVZ-KP	OK
SEZ-KD	OK
SLZ-KA	OK
MLZ-KP	NO
MLZ-KY	NO

ATTENTION:
PAC-USSEN002-FM-1 does not come with the conversion cable and is not compatible with the following indoor units:
PEFY-NMHU, PFFY-NEMU and PFFY-NRMU.

1340 Satellite Boulevard. Suwanee, GA 30024
Toll Free: 800-433-4822 www.mehvac.com

FORM# M_Submittal_PAC-USSEN002-FM-1 - 202210

Specifications are subject to change without notice.

© 2022 Mitsubishi Electric Trane HVAC US LLC. All rights reserved.

HG-A6
Hail Guard

MITSUBISHI ELECTRIC
HEATING & AIR CONDITIONING

Job Name:
System Reference: Date:

FEATURES
- Compatible with M- and P-Series outdoor units
- Protection from snow and hail
- Engineered using 20 guage galvanized steel to protect from 1" and larger hailstones
- Guards keep heavy accumulation off coil surfaces to protect from compromised performance

SPECIFICATIONS

Material	Powder Coated 20 gauge, G60 galvanized steel
Powder Coat	P1135-G6 Polyester TGIC Erie Powder Coating
	3 mil nomiNTl (± 1 mil) uniform thickness over the entire part.
Color	Matches Outdoor Unit
Screen	1 inch (25.4 mm) square hole pattern

COMPATIBILITY

Single Zone
PUY-A24NHA7(-BS)
PUY-A30NHA7(-BS)
PUZ-A24NHA7(-BS)
PUZ-HA24NHA1
PUZ-A30NHA7(-BS)
SUZ-KA24NAHZ

DIMENSIONS

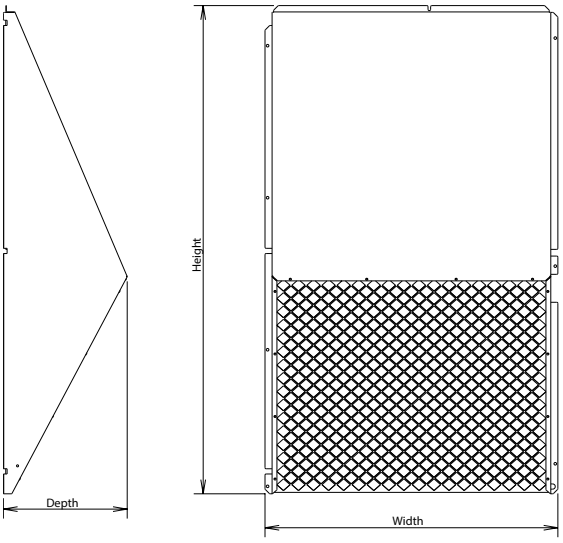

		HG-A6	
		Rear	Side
Kit	kg	10.42	10.42
	(lbs)	(22.97)	(22.97)
Weight	kg	6.75	3.66
	(lbs)	(14.89)	(8.08)
Height	mm	868	868
	(in)	(34.17)	(34.17)
Width	mm	715	206
	(in)	(28.15)	(8.11)
Depth	mm	333	326
	(in)	(13.11)	(12.83)

1340 Satellite Boulevard Suwanee, GA 30024
Toll Free: 800-433-4822 www.mehvac.com

FORM# HG-A6 - 202207

© 2022 Mitsubishi Electric Trane HVAC US LLC. All rights reserved.

PAC-SJ95MA-E/PAC-SJ96MA-E
M-NET CONTROL ADAPTER FOR P-SERIES OUTDOOR UNITS

Job Name:
System Reference: Date:

☐ PAC-SJ95MA-E	☐ PAC-SJ96MA-E

FEATURES

- Allows the P-Series outdoor units to communicate with the CITY MULTI® Controls Network
- Connects to outdoor unit
- Requires one converter per outdoor unit

TABLE 1. LIST OF MODELS (PAC-SJ95MA-E)

Group A	Group B	Group C
PUY-A12,18NHA	PUZ/Y-A24,30,36,42NHA	PUZ/Y-A24,30NHA7(-BS)
PUY-A12,18NHA2	PUZ/Y-A24,30,36,42NHA2	PUZ/Y-A36,42NKA7(-BS)
PUY-A12,18NHA3	PUZ/Y-A24,30,36,42NHA3	
PUY-A12,18NHA4	PUZ/Y-A24,30,36,42NHA4	
PUY-A12,18NHA6(-BS)	PUZ/Y-A42NHA5	
PUZ-A18NHA	PUZ/Y-A24,30,36,42NHA6(-BS)	
PUZ-A18NHA2	PUZ/Y-A42NKA7(-BS)	
PUZ-A18NHA3	PUZ-HA24NHA	
PUZ-A18NHA4	PUZ-HA30/36NHA	
PUZ-A18NHA6(-BS)	PUZ-HA24NHA1	
	PUZ-HA30/36NHA2	
	PUZ-HA30/36NHA4	
	PUZ-HA30/36NHA5	
	PUZ-HA30/36NKA	
	PUZ-HA42NKA	
	PUZ-HA42NKA1	

TABLE 2. LIST OF MODELS (PAC-SJ96MA-E)

Group A
PUZ-A12,18NKA7(-BS)
PUY-A12,18NKA7(-BS)

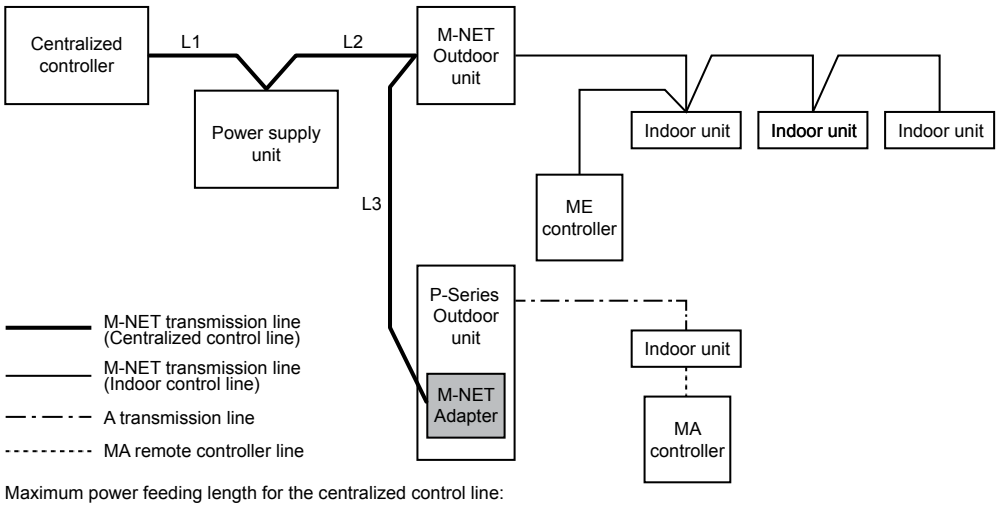

Maximum power feeding length for the centralized control line:
L1 ≦ 200 m (656 ft)
L2 + L3 ≦ 200 m (656 ft)

1340 Satellite Boulevard. Suwanee, GA 30024
Toll Free: 800-433-4822 www.mehvac.com

FORM# M_SUBMITTAL_PAC-SJ95MA-E_and_PAC-SJ96MA-E_en - 202103

Specifications are subject to change without notice.

© Mitsubishi Electric Trane HVAC US LLC. All rights reserved.

SRD-4
Snow/Rain Diverter

MITSUBISHI ELECTRIC
HEATING & AIR CONDITIONING

Job Name:
System Reference: Date:

FEATURES

- Protects outdoor unit from harsh winter elements such as rooftop snow melt or freezing rain that may drip on outdoor unit and could potentially refreeze locking up fan motor by diverting these elements away from outdoor unit.
- Product is Aluminum which makes it rust resistant especially important near coastal applications.
- Durable and easy installation.
- Can be used if have double stacking outdoor unit application, so that will divert condensation from mounted top outdoor unit away from bottom mounted outdoor unit

SPECIFICATIONS

Color	Surface Treatment	Material	Weight
Matches Outdoor Unit (Ivory Munsell 3Y 7.8/1.1)	Polyester Powder Coating	16ga 5052-H32 Aluminum Alloy sheet	4.6 lbs

NOTES

- Use the locating tabs on the inside of the SRD to position the SRD correctly onto the top panel of the outdoor unit.
- Properly attach the SRDs to the outdoor unit by using self-tapping screws provided only. Please see included install manual.

1340 Satellite Boulevard Suwanee, GA 30024
Toll Free: 800-433-4822 www.mehvac.com

Specifications are subject to change without notice.

© 2024 Mitsubishi Electric Trane HVAC US LLC. All rights reserved.

DIMENSIONS

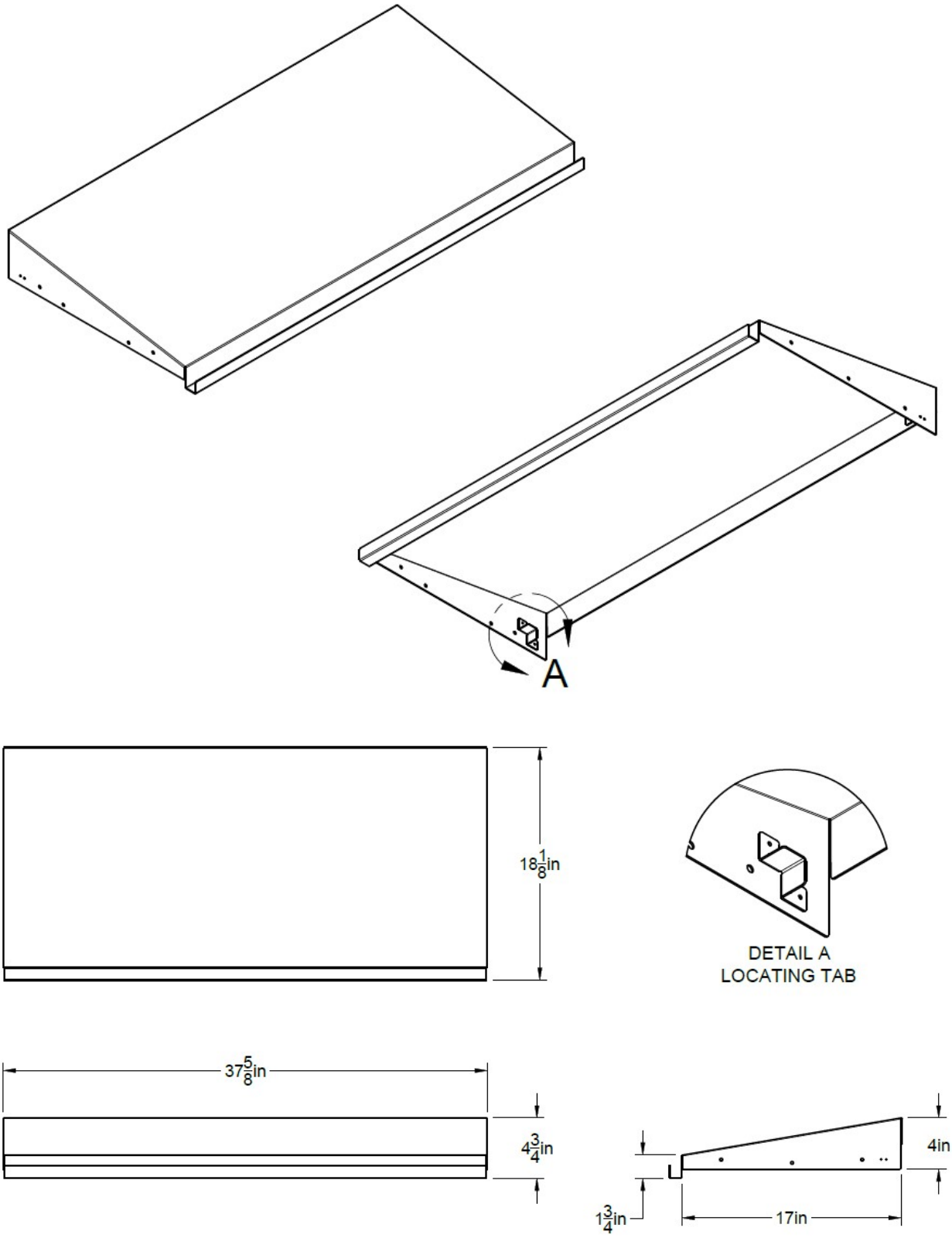

1340 Satellite Boulevard Suwanee, GA 30024
Toll Free: 800-433-4822 www.mehvac.com

Specifications are subject to change without notice.

© 2024 Mitsubishi Electric Trane HVAC US LLC. All rights reserved.

WB-PA4
Front Wind Baffle

MITSUBISHI ELECTRIC
HEATING & AIR CONDITIONING

Job Name:
System Reference: Date:

GENERAL FEATURES
- Front Wind Baffles allow outdoor units to operate at full capacity down to the temperature ranges shown in the table below.
- Prevents wind from reversing outdoor fan rotation when unenergized.
- Durable and low maintenance construction.

PLEASE NOTE
- Install outdoor units with the back surface facing wall side to eliminate the effects of external wind
- Outdoor units should not be installed in an orientation or site where the wind blows directly at the back of the unit
- Wind baffle should not be used where there is any obstacle at either side or above the outdoor unit as the discharged air will be blocked
- Refer to outdoor unit for detailed installation instructions

SPECIFICATIONS

Exterior			
Color	Surface Treatment	Material	Weight
Matches P-Series Outdoor Unit (Ivory Munsell 3Y 7.8/1.1)	Polyester Powder Coating	Alloy Hot-Dip Zinc Coated Carbon Steel Sheet	7 Lbs. 7.9 Oz.

APPLICATION
- The Wind Baffles are used to extend the cooling temperature operation range of the PUY, PUZ and MXZ models
- The information below outlines which wind baffles to utilize per required operation range
- Please refer to the installation manual of the appropriate outdoor unit for correct installation requirements

COOLING TEMPERATURE OPERATION RANGE WITH WIND BAFFLES

Model Series	Operation Range Without Wind Baffles	Front Wind Baffles	Front + Advanced Side + Advanced Rear Wind Baffles
PUZ-7	23ºF - 115ºF	0ºF	N/A
PUY-7	23ºF - 115ºF	0ºF	-40ºF
MXZ	23ºF - 115ºF	0ºF	N/A

**If unit is exposed without wall surfaces surrounding for protection from wind, then side and rear wind baffles will be required. Please refer to installation dimensions and outdoor unit installation manual for appropriate requirements.

COMPATIBILITY

Single Zone	WB-PA4 (Qty)
PUY-A12NKA7(-BS)	1
PUY-A18NKA7(-BS)	1
PUZ-A12NKA7(-BS)	1
PUZ-A18NKA7(-BS)	1

© 2022 Mitsubishi Electric Trane HVAC US LLC. All rights reserved.

APPENDIX - PREVIOUS GENERATION COMPATIBILITY

Models	Front Wind Baffles				Advanced Side Wind Baffles			Advanced Rear Wind Baffles		
	WB-PA1	WB-PA2[1]	WB-PA3	WB-PA5	WB-SD1	WB-SD2[2]	WB-SD3	WB-RE1	WB-RE2[3]	WB-RE3
PUY/Z-A-A12NHA4	1									
PUY/Z-A-A18NHA4	1									
PUY/Z-A-A24NHA4		1								
PUY/Z-A-A30NHA4		1								
PUY/Z-A-A36NHA4		1								
PUY/Z-A-A42NHA4		2								
PUY/Z-A-A42NHA5		2								
PUZ-HA30NHA4		2								
PUZ-HA36NHA4		2								
PUMY-P36NHMU				2						
PUMY-P36NKMU1			2							
PUMY-P48NHMU				2						
PUMY-P48NKMU1			2							
PUMY-P60NKMU/1			2							
PUY/Z-A12NHA6	1				1			1		
PUY/Z-A18NHA6	1				1			1		
PUY/Z-A24NHA6		1				1			1	
PUY/Z-A30NHA6		1				1			1	
PUY/Z-A36NHA6		1				1			1	
PUY/Z-A42NHA6		2					1			1

[1] WB-PA2 is replaced by WB-PA5
[2] WB-SD2 is replaced by WB-SD5
[3] WB-RE2 is replaced by WB-RE5

COOLING TEMPERATURE OPERATION RANGE WITH WIND BAFFLES

Model Series	Operation Range Without Wind Baffles	Front Wind Baffles	Front + Advanced Side + Advanced Rear Wind Baffles
PUZ-4	23ºF - 115ºF	0ºF	N/A
PUY-4	23ºF - 115ºF	0ºF	N/A
PUZ-5	23ºF - 115ºF	0ºF	N/A
PUY-5	23ºF - 115ºF	0ºF	N/A
PUZ-6	23ºF - 115ºF	0ºF	N/A
PUY-6*	23ºF - 115ºF	0ºF	-20ºF
PUMY**	23ºF - 115ºF	5ºF	N/A

*PUY-A42NHA6 units do not have the extended cooling range below 0° F
**Operation range varies based on indoor unit connected, refer to service manual for applicable indoor units

© 2022 Mitsubishi Electric Trane HVAC US LLC. All rights reserved.

DIMENSIONS: WB-PA4

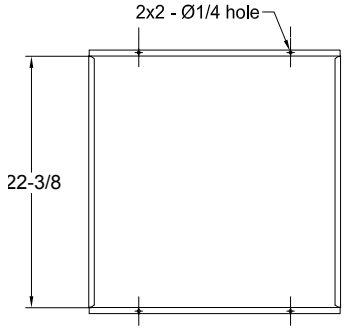

Back View

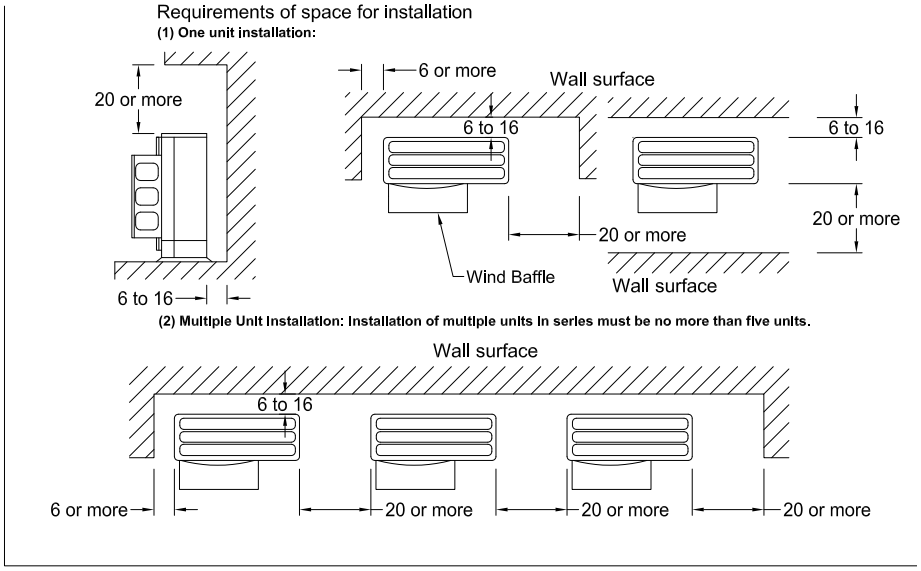

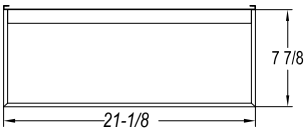

Side View

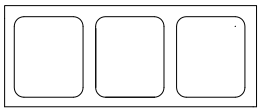

Top View

ALL DIMENSIONS IN INCHES
ALL DIMENSIONS ±1/32"

1340 Satellite Boulevard Suwanee, GA 30024
Toll Free: 800-433-4822 www.mehvac.com

FORM# WB-PA4 - 202208

© 2022 Mitsubishi Electric Trane HVAC US LLC. All rights reserved.

WB-SD4
Side Advanced Wind Baffle

Job Name:
System Reference: Date:

GENERAL FEATURES

- Front Wind Baffles allow outdoor units to operate at full capacity down to the temperature ranges shown in the table below.
- Prevents wind from reversing outdoor fan rotation when unenergized.
- Durable and low maintenance construction.

SPECIFICATIONS

Exterior			
Color	Surface Treatment	Material	Weight
Matches P-Series Outdoor Unit (Ivory Munsell 3Y 7.8/1.1)	Polyester Powder Coating	Alloy Hot-Dip Zinc Coated Carbon Steel Sheet	6 Lbs.

DIMENSIONS

Unit: inch

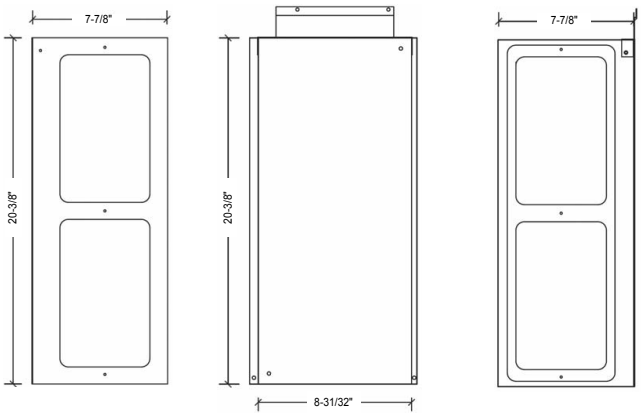

APPLICATION

- The Wind Baffles are used to extend the cooling temperature operation range of the PUY, PUZ and MXZ models
- The information below outlines which wind baffles to utilize per required operation range
- Please refer to the installation manual of the appropriate outdoor unit for correct installation requirements

COOLING TEMPERATURE OPERATION RANGE WITH WIND BAFFLES

Model Series	Operation Range Without Wind Baffles	Front Wind Baffles	Front + Advanced Side + Advanced Rear Wind Baffles
PUZ-7	23ºF - 115ºF	0ºF	N/A
PUY-7	23ºF - 115ºF	0ºF	-40ºF
MXZ	23ºF - 115ºF	0ºF	N/A

**If unit is exposed without wall surfaces surrounding for protection from wind, then side and rear wind baffles will be required. Please refer to installation dimensions and outdoor unit installation manual for appropriate requirements.

COMPATIBILITY

Single Zone	WB-SD4 (Qty)
PUY-A12NKA7(-BS)	1
PUY-A18NKA7(-BS)	1
PUZ-A12NKA7(-BS)	1
PUZ-A18NKA7(-BS)	1

© 2022 Mitsubishi Electric Trane HVAC US LLC. All rights reserved.

APPENDIX - PREVIOUS GENERATION COMPATIBILITY

Models	Front Wind Baffles				Advanced Side Wind Baffles			Advanced Rear Wind Baffles		
	WB-PA1	WB-PA2[1]	WB-PA3	WB-PA5	WB-SD1	WB-SD2[2]	WB-SD3	WB-RE1	WB-RE2[3]	WB-RE3
PUY/Z-A-A12NHA4	1									
PUY/Z-A-A18NHA4	1									
PUY/Z-A-A24NHA4		1								
PUY/Z-A-A30NHA4		1								
PUY/Z-A-A36NHA4		1								
PUY/Z-A-A42NHA4		2								
PUY/Z-A-A42NHA5		2								
PUZ-HA30NHA4		2								
PUZ-HA36NHA4		2								
PUMY-P36NHMU				2						
PUMY-P36NKMU1			2							
PUMY-P48NHMU				2						
PUMY-P48NKMU1			2							
PUMY-P60NKMU/1			2							
PUY/Z-A12NHA6	1				1			1		
PUY/Z-A18NHA6	1				1			1		
PUY/Z-A24NHA6		1				1			1	
PUY/Z-A30NHA6		1				1			1	
PUY/Z-A36NHA6		1				1			1	
PUY/Z-A42NHA6		2					1			1

[1] WB-PA2 is replaced by WB-PA5
[2] WB-SD2 is replaced by WB-SD5
[3] WB-RE2 is replaced by WB-RE5

COOLING TEMPERATURE OPERATION RANGE WITH WIND BAFFLES

Model Series	Operation Range Without Wind Baffles	Front Wind Baffles	Front + Advanced Side + Advanced Rear Wind Baffles
PUZ-4	23ºF - 115ºF	0ºF	N/A
PUY-4	23ºF - 115ºF	0ºF	N/A
PUZ-5	23ºF - 115ºF	0ºF	N/A
PUY-5	23ºF - 115ºF	0ºF	N/A
PUZ-6	23ºF - 115ºF	0ºF	N/A
PUY-6*	23ºF - 115ºF	0ºF	-20ºF
PUMY**	23ºF - 115ºF	5ºF	N/A

*PUY-A42NHA6 units do not have the extended cooling range below 0° F
**Operation range varies based on indoor unit connected, refer to service manual for applicable indoor units

1340 Satellite Boulevard Suwanee, GA 30024
Toll Free: 800-433-4822 www.mehvac.com

FORM# WB-SD4 - 202208

 © 2022 Mitsubishi Electric Trane HVAC US LLC. All rights reserved.

WB-RE4
Rear Wind Baffle

MITSUBISHI ELECTRIC
HEATING & AIR CONDITIONING

Job Name:
System Reference: Date:

GENERAL FEATURES

- Front Wind Baffles allow outdoor units to operate at full capacity down to the temperature ranges shown in the table below.
- Prevents wind from reversing outdoor fan rotation when unenergized.
- Durable and low maintenance construction.

SPECIFICATIONS

Exterior			
Color	Surface Treatment	Material	Weight
Matches P-Series Outdoor Unit (Ivory Munsell 3Y 7.8/1.1)	Polyester Powder Coating	Alloy Hot-Dip Zinc Coated Carbon Steel Sheet	11 Lbs.

DIMENSIONS

Unit: inch

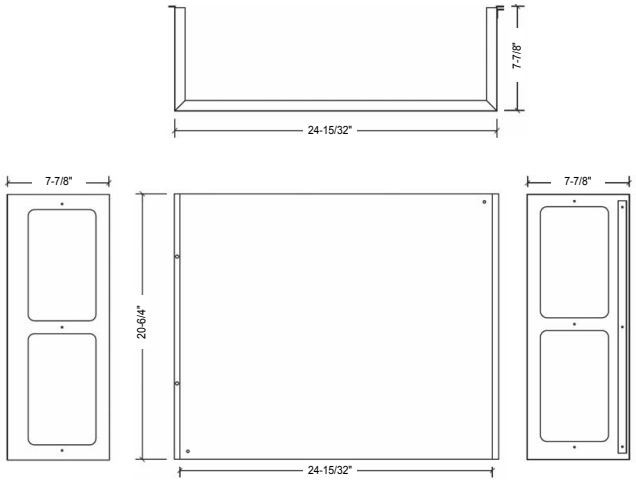

APPLICATION

- The Wind Baffles are used to extend the cooling temperature operation range of the PUY, PUZ and MXZ models
- The information below outlines which wind baffles to utilize per required operation range
- Please refer to the installation manual of the appropriate outdoor unit for correct installation requirements

COOLING TEMPERATURE OPERATION RANGE WITH WIND BAFFLES

Model Series	Operation Range Without Wind Baffles	Front Wind Baffles	Front + Advanced Side + Advanced Rear Wind Baffles
PUZ-7	23ºF - 115ºF	0ºF	N/A
PUY-7	23ºF - 115ºF	0ºF	-40ºF
MXZ	23ºF - 115ºF	0ºF	N/A

**If unit is exposed without wall surfaces surrounding for protection from wind, then side and rear wind baffles will be required. Please refer to installation dimensions and outdoor unit installation manual for appropriate requirements.

COMPATIBILITY

Single Zone	WB-RE4 (Qty)
PUY-A12NKA7(-BS)	1
PUY-A18NKA7(-BS)	1
PUZ-A12NKA7(-BS)	1
PUZ-A18NKA7(-BS)	1

© 2022 Mitsubishi Electric Trane HVAC US LLC. All rights reserved.

APPENDIX - PREVIOUS GENERATION COMPATIBILITY

Models	Front Wind Baffles				Advanced Side Wind Baffles			Advanced Rear Wind Baffles		
	WB-PA1	WB-PA2[1]	WB-PA3	WB-PA5	WB-SD1	WB-SD2[2]	WB-SD3	WB-RE1	WB-RE2[3]	WB-RE3
PUY/Z-A-A12NHA4	1									
PUY/Z-A-A18NHA4	1									
PUY/Z-A-A24NHA4		1								
PUY/Z-A-A30NHA4		1								
PUY/Z-A-A36NHA4		1								
PUY/Z-A-A42NHA4		2								
PUY/Z-A-A42NHA5		2								
PUZ-HA30NHA4		2								
PUZ-HA36NHA4		2								
PUMY-P36NHMU				2						
PUMY-P36NKMU1			2							
PUMY-P48NHMU				2						
PUMY-P48NKMU1			2							
PUMY-P60NKMU/1			2							
PUY/Z-A12NHA6	1				1			1		
PUY/Z-A18NHA6	1				1			1		
PUY/Z-A24NHA6		1				1			1	
PUY/Z-A30NHA6		1				1			1	
PUY/Z-A36NHA6		1				1			1	
PUY/Z-A42NHA6		2					1			1

[1] WB-PA2 is replaced by WB-PA5
[2] WB-SD2 is replaced by WB-SD5
[3] WB-RE2 is replaced by WB-RE5

COOLING TEMPERATURE OPERATION RANGE WITH WIND BAFFLES

Model Series	Operation Range Without Wind Baffles	Front Wind Baffles	Front + Advanced Side + Advanced Rear Wind Baffles
PUZ-4	23ºF - 115ºF	0ºF	N/A
PUY-4	23ºF - 115ºF	0ºF	N/A
PUZ-5	23ºF - 115ºF	0ºF	N/A
PUY-5	23ºF - 115ºF	0ºF	N/A
PUZ-6	23ºF - 115ºF	0ºF	N/A
PUY-6*	23ºF - 115ºF	0ºF	-20ºF
PUMY**	23ºF - 115ºF	5ºF	N/A

*PUY-A42NHA6 units do not have the extended cooling range below 0° F
**Operation range varies based on indoor unit connected, refer to service manual for applicable indoor units

1340 Satellite Boulevard Suwanee, GA 30024
Toll Free: 800-433-4822 www.mehvac.com

FORM# WB-RE4 - 202208

 © 2022 Mitsubishi Electric Trane HVAC US LLC. All rights reserved.

WB-PA5
Front Wind Baffle

MITSUBISHI ELECTRIC
HEATING & AIR CONDITIONING

Job Name:
System Reference: Date:

GENERAL FEATURES
- Front Wind Baffles allow outdoor units to operate at full capacity down to the temperature ranges shown in the table below.
- Prevents wind from reversing outdoor fan rotation when unenergized.
- Durable and low maintenance construction.

PLEASE NOTE
- Install outdoor units with the back surface facing wall side to eliminate the effects of external wind
- Outdoor units should not be installed in an orientation or site where the wind blows directly at the back of the unit
- Wind baffle should not be used where there is any obstacle at either side or above the outdoor unit as the discharged air will be blocked
- Refer to outdoor unit for detailed installation instructions

SPECIFICATIONS

Exterior			
Color	Surface Treatment	Material	Weight
Matches P-Series Outdoor Unit (Ivory Munsell 3Y 7.8/1.1)	Polyester Powder Coating	Alloy Hot-Dip Zinc Coated Carbon Steel Sheet	8 Lbs. 8 Oz.

APPLICATION
- The Wind Baffles are used to extend the cooling temperature operation range of the PUY, PUZ and MXZ models
- The information below outlines which wind baffles to utilize per required operation range
- Please refer to the installation manual of the appropriate outdoor unit for correct installation requirements

COOLING TEMPERATURE OPERATION RANGE WITH WIND BAFFLES

Model Series	Operation Range Without Wind Baffles	Front Wind Baffles	Front + Advanced Side + Advanced Rear Wind Baffles
PUZ-7	23ºF - 115ºF	0ºF	N/A
PUY-7	23ºF - 115ºF	0ºF	-40ºF
MXZ	23ºF - 115ºF	0ºF	N/A

**If unit is exposed without wall surfaces surrounding for protection from wind, then side and rear wind baffles will be required. Please refer to installation dimensions and outdoor unit installation manual for appropriate requirements.

COMPATIBILITY

Single Zone	WB-PA5 (Qty)
PUY-A24NHA7(-BS)	1
PUY-A30NHA7(-BS)	1
PUZ-A24NHA7(-BS)	1
PUZ-A30NHA7(-BS)	1
PUZ-HA24NHA1	1

© 2022 Mitsubishi Electric Trane HVAC US LLC. All rights reserved.

APPENDIX - PREVIOUS GENERATION COMPATIBILITY

Models	Front Wind Baffles				Advanced Side Wind Baffles			Advanced Rear Wind Baffles		
	WB-PA1	WB-PA2[1]	WB-PA3	WB-PA5	WB-SD1	WB-SD2[2]	WB-SD3	WB-RE1	WB-RE2[3]	WB-RE3
PUY/Z-A-A12NHA4	1									
PUY/Z-A-A18NHA4	1									
PUY/Z-A-A24NHA4		1								
PUY/Z-A-A30NHA4		1								
PUY/Z-A-A36NHA4		1								
PUY/Z-A-A42NHA4		2								
PUY/Z-A-A42NHA5		2								
PUZ-HA30NHA4		2								
PUZ-HA36NHA4		2								
PUMY-P36NHMU				2						
PUMY-P36NKMU1			2							
PUMY-P48NHMU				2						
PUMY-P48NKMU1			2							
PUMY-P60NKMU/1			2							
PUY/Z-A12NHA6	1				1			1		
PUY/Z-A18NHA6	1				1			1		
PUY/Z-A24NHA6		1				1			1	
PUY/Z-A30NHA6		1				1			1	
PUY/Z-A36NHA6		1				1			1	
PUY/Z-A42NHA6		2					1			1

[1] WB-PA2 is replaced by WB-PA5
[2] WB-SD2 is replaced by WB-SD5
[3] WB-RE2 is replaced by WB-RE5

COOLING TEMPERATURE OPERATION RANGE WITH WIND BAFFLES

Model Series	Operation Range Without Wind Baffles	Front Wind Baffles	Front + Advanced Side + Advanced Rear Wind Baffles
PUZ-4	23ºF - 115ºF	0ºF	N/A
PUY-4	23ºF - 115ºF	0ºF	N/A
PUZ-5	23ºF - 115ºF	0ºF	N/A
PUY-5	23ºF - 115ºF	0ºF	N/A
PUZ-6	23ºF - 115ºF	0ºF	N/A
PUY-6*	23ºF - 115ºF	0ºF	-20ºF
PUMY**	23ºF - 115ºF	5ºF	N/A

*PUY-A42NHA6 units do not have the extended cooling range below 0° F
**Operation range varies based on indoor unit connected, refer to service manual for applicable indoor units

© 2022 Mitsubishi Electric Trane HVAC US LLC. All rights reserved.

DIMENSIONS: WB-PA5

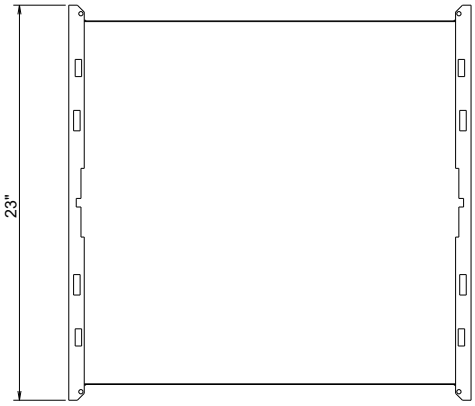

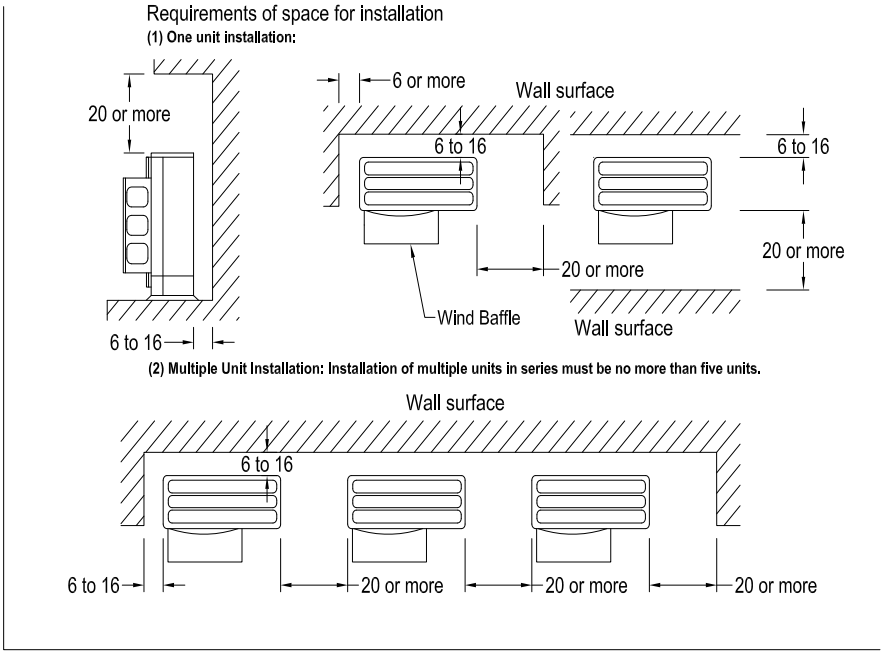

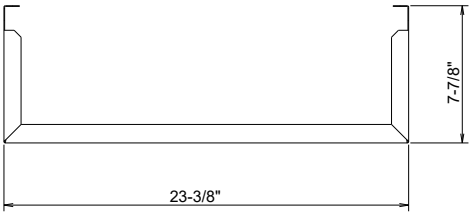

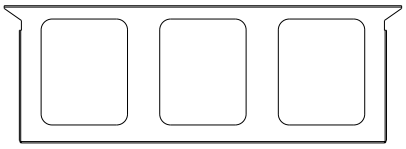

ALL DIMENSIONS IN INCHES
ALL DIMENSION ±1/32"

1340 Satellite Boulevard Suwanee, GA 30024
Toll Free: 800-433-4822 www.mehvac.com

FORM# WB-PA5 - 202208

© 2022 Mitsubishi Electric Trane HVAC US LLC. All rights reserved.

WB-SD5
Side Advanced Wind Baffle

MITSUBISHI ELECTRIC
HEATING & AIR CONDITIONING

Job Name:
System Reference: Date:

GENERAL FEATURES

- Front Wind Baffles allow outdoor units to operate at full capacity down to the temperature ranges shown in the table below.
- Prevents wind from reversing outdoor fan rotation when unenergized.
- Durable and low maintenance construction.

SPECIFICATIONS

Exterior			
Color	Surface Treatment	Material	Weight
Matches P-Series Outdoor Unit (Ivory Munsell 3Y 7.8/1.1)	Polyester Powder Coating	Alloy Hot-Dip Zinc Coated Carbon Steel Sheet	10 Lbs.

DIMENSIONS

Unit: inch

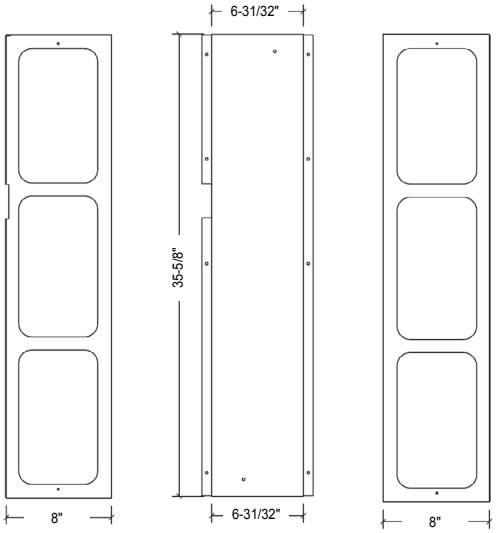

APPLICATION

- The Wind Baffles are used to extend the cooling temperature operation range of the PUY, PUZ and MXZ models
- The information below outlines which wind baffles to utilize per required operation range
- Please refer to the installation manual of the appropriate outdoor unit for correct installation requirements

COOLING TEMPERATURE OPERATION RANGE WITH WIND BAFFLES

Model Series	Operation Range Without Wind Baffles	Front Wind Baffles	Front + Advanced Side + Advanced Rear Wind Baffles
PUZ-7	23ºF - 115ºF	0ºF	N/A
PUY-7	23ºF - 115ºF	0ºF	-40ºF
MXZ	23ºF - 115ºF	0ºF	N/A

**If unit is exposed without wall surfaces surrounding for protection from wind, then side and rear wind baffles will be required. Please refer to installation dimensions and outdoor unit installation manual for appropriate requirements.

COMPATIBILITY

Single Zone	WB-SD5 (Qty)
PUY-A24NHA7(-BS)	1
PUY-A30NHA7(-BS)	1
PUZ-A24NHA7(-BS)	1
PUZ-A30NHA7(-BS)	1
PUZ-HA24NHA1	1

© 2022 Mitsubishi Electric Trane HVAC US LLC. All rights reserved.

APPENDIX - PREVIOUS GENERATION COMPATIBILITY

Models	Front Wind Baffles				Advanced Side Wind Baffles			Advanced Rear Wind Baffles		
	WB-PA1	WB-PA2[1]	WB-PA3	WB-PA5	WB-SD1	WB-SD2[2]	WB-SD3	WB-RE1	WB-RE2[3]	WB-RE3
PUY/Z-A-A12NHA4	1									
PUY/Z-A-A18NHA4	1									
PUY/Z-A-A24NHA4		1								
PUY/Z-A-A30NHA4		1								
PUY/Z-A-A36NHA4		1								
PUY/Z-A-A42NHA4		2								
PUY/Z-A-A42NHA5		2								
PUZ-HA30NHA4		2								
PUZ-HA36NHA4		2								
PUMY-P36NHMU				2						
PUMY-P36NKMU1			2							
PUMY-P48NHMU				2						
PUMY-P48NKMU1			2							
PUMY-P60NKMU/1			2							
PUY/Z-A12NHA6	1				1			1		
PUY/Z-A18NHA6	1				1			1		
PUY/Z-A24NHA6		1				1			1	
PUY/Z-A30NHA6		1				1			1	
PUY/Z-A36NHA6		1				1			1	
PUY/Z-A42NHA6		2					1			1

[1] WB-PA2 is replaced by WB-PA5
[2] WB-SD2 is replaced by WB-SD5
[3] WB-RE2 is replaced by WB-RE5

COOLING TEMPERATURE OPERATION RANGE WITH WIND BAFFLES

Model Series	Operation Range Without Wind Baffles	Front Wind Baffles	Front + Advanced Side + Advanced Rear Wind Baffles
PUZ-4	23ºF - 115ºF	0ºF	N/A
PUY-4	23ºF - 115ºF	0ºF	N/A
PUZ-5	23ºF - 115ºF	0ºF	N/A
PUY-5	23ºF - 115ºF	0ºF	N/A
PUZ-6	23ºF - 115ºF	0ºF	N/A
PUY-6*	23ºF - 115ºF	0ºF	-20ºF
PUMY**	23ºF - 115ºF	5ºF	N/A

*PUY-A42NHA6 units do not have the extended cooling range below 0° F
**Operation range varies based on indoor unit connected, refer to service manual for applicable indoor units

1340 Satellite Boulevard Suwanee, GA 30024
Toll Free: 800-433-4822 www.mehvac.com

FORM# WB-SD5 - 202208

 © 2022 Mitsubishi Electric Trane HVAC US LLC. All rights reserved.

WB-RE5
Rear Wind Baffle

MITSUBISHI ELECTRIC
HEATING & AIR CONDITIONING

Job Name:
System Reference: Date:

GENERAL FEATURES

- Front Wind Baffles allow outdoor units to operate at full capacity down to the temperature ranges shown in the table below.
- Prevents wind from reversing outdoor fan rotation when unenergized.
- Durable and low maintenance construction.

SPECIFICATIONS

Exterior			
Color	Surface Treatment	Material	Weight
Matches P-Series Outdoor Unit (Ivory Munsell 3Y 7.8/1.1)	Polyester Powder Coating	Alloy Hot-Dip Zinc Coated Carbon Steel Sheet	18 Lbs.

DIMENSIONS

Unit: inch

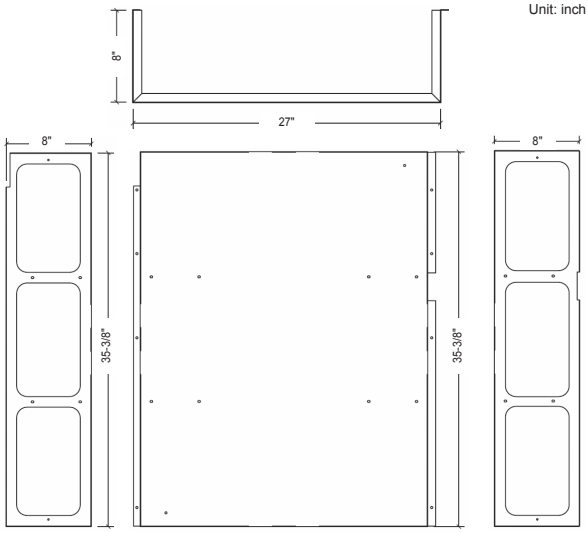

APPLICATION

- The Wind Baffles are used to extend the cooling temperature operation range of the PUY, PUZ and MXZ models
- The information below outlines which wind baffles to utilize per required operation range
- Please refer to the installation manual of the appropriate outdoor unit for correct installation requirements

COOLING TEMPERATURE OPERATION RANGE WITH WIND BAFFLES

Model Series	Operation Range Without Wind Baffles	Front Wind Baffles	Front + Advanced Side + Advanced Rear Wind Baffles
PUZ-7	23ºF - 115ºF	0ºF	N/A
PUY-7	23ºF - 115ºF	0ºF	-40ºF
MXZ	23ºF - 115ºF	0ºF	N/A

**If unit is exposed without wall surfaces surrounding for protection from wind, then side and rear wind baffles will be required. Please refer to installation dimensions and outdoor unit installation manual for appropriate requirements.

COMPATIBILITY

Single Zone	WB-RE5 (Qty)
PUY-A24NHA7(-BS)	1
PUY-A30NHA7(-BS)	1
PUZ-A24NHA7(-BS)	1
PUZ-A30NHA7(-BS)	1
PUZ-HA24NHA1	1

© 2022 Mitsubishi Electric Trane HVAC US LLC. All rights reserved.

APPENDIX - PREVIOUS GENERATION COMPATIBILITY

Models	Front Wind Baffles				Advanced Side Wind Baffles			Advanced Rear Wind Baffles		
	WB-PA1	WB-PA2[1]	WB-PA3	WB-PA5	WB-SD1	WB-SD2[2]	WB-SD3	WB-RE1	WB-RE2[3]	WB-RE3
PUY/Z-A-A12NHA4	1									
PUY/Z-A-A18NHA4	1									
PUY/Z-A-A24NHA4		1								
PUY/Z-A-A30NHA4		1								
PUY/Z-A-A36NHA4		1								
PUY/Z-A-A42NHA4		2								
PUY/Z-A-A42NHA5		2								
PUZ-HA30NHA4		2								
PUZ-HA36NHA4		2								
PUMY-P36NHMU				2						
PUMY-P36NKMU1			2							
PUMY-P48NHMU				2						
PUMY-P48NKMU1			2							
PUMY-P60NKMU/1			2							
PUY/Z-A12NHA6	1				1			1		
PUY/Z-A18NHA6	1				1			1		
PUY/Z-A24NHA6		1				1			1	
PUY/Z-A30NHA6		1				1			1	
PUY/Z-A36NHA6		1				1			1	
PUY/Z-A42NHA6		2					1			1

[1] WB-PA2 is replaced by WB-PA5
[2] WB-SD2 is replaced by WB-SD5
[3] WB-RE2 is replaced by WB-RE5

COOLING TEMPERATURE OPERATION RANGE WITH WIND BAFFLES

Model Series	Operation Range Without Wind Baffles	Front Wind Baffles	Front + Advanced Side + Advanced Rear Wind Baffles
PUZ-4	23ºF - 115ºF	0ºF	N/A
PUY-4	23ºF - 115ºF	0ºF	N/A
PUZ-5	23ºF - 115ºF	0ºF	N/A
PUY-5	23ºF - 115ºF	0ºF	N/A
PUZ-6	23ºF - 115ºF	0ºF	N/A
PUY-6*	23ºF - 115ºF	0ºF	-20ºF
PUMY**	23ºF - 115ºF	5ºF	N/A

*PUY-A42NHA6 units do not have the extended cooling range below 0° F
**Operation range varies based on indoor unit connected, refer to service manual for applicable indoor units

1340 Satellite Boulevard Suwanee, GA 30024
Toll Free: 800-433-4822 www.mehvac.com

FORM# WB-RE5 - 202208

 © 2022 Mitsubishi Electric Trane HVAC US LLC. All rights reserved.

Job Name:

System Reference: Date:

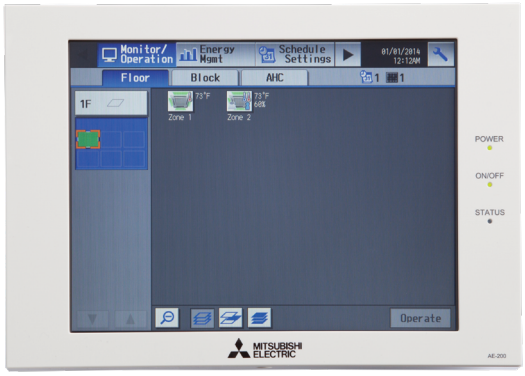

AE-200A

- AE-200A is the Master Controller
- Master Controller can operate and monitor up to 50 indoor units
- Expansion Controllers can expand an AE-200A to operate and monitor up to 50 additional indoor units through the touchscreen or web browser
- Network up to three AE-50A or EW-50A to one AE-200A to allow the AE-200A to manage up to 200 indoor units

OPTIONAL LICENSES

- LIC-BACnet Master: BACnet Function
  - Connected air conditioning units can be monitored and operated not only from the existing web browser or the AE-200/AE-50's LCD, but also from the building management system using the BACnet® communication protocol. See LIC-BACnet Data Sheet for more information.
- LIC-Charge Master: Energy Allocation
  - The apportioned electricity billing function is an electric energy
  - apportionment system that apportions electric energy using input from electricity meters with a pulse generator function. The respective amounts of electric energy can be apportioned based on the operating status and capacity of each tenant. See LIC-Charge Data Sheet for more information.
- LIC-PWeb Master: Online Personal Browser
  - Allows tenant managers and general users to control their respective zone conditions via a networked PC, tablet, or mobile phone with or without local remote controllers installed in the space. See LIC-PWeb Data Sheet for more information.

SPECIFICATIONS

- Supports dual set point functionality (connected equipment dependent)
- Displays:
  - CITY MULTI® compressor speed and hi/low pressure
  - AdvancedHVAC Controller (DC-A2IO) input/output status
  - Indoor unit free contact input/output status
  - Space temperature and humidity (from Smart ME or AI controller)
  - Error code (Can be emailed automatically to specified recipients)
  - Unoccupied setback up temperature range
- Functions
  - Hold function (temporarily disables schedules indoor unit model dependent)
  - Initial setting
  - Operation data back-up
- Permits or prohibits remote controller functions:
  - On/Off
  - Change Operation Mode
  - Change Set Point Temperature
  - Filter Status
  - Change Fan Speed
  - Change Air Direction
- External input/output signals can be used for batch operations such as Start/Stop and Emergency Stop (requires PAC-YG10HA)
- Pulse signal input can obtain watt-hour meter, billing data and energy management data based on the cumulative number of pulse signal pulse signals directly input from a metering device
- Temperature set point range limits can be set for local remote controllers
- User defined indoor unit functions:
  - On/Off
  - Monitoring and Operation
  - Operation mode:
    - Auto* (Dual or Single set point)
    - Heat
    - Fan
    - Drying
    - Setback*

      Note: *R2 Series only (connected equipment dependent)
  - Temperature Setting
  - Fan Speed
  - Airflow Direction
- • Monitoring and Control:
  - CITY MULTI® indoor units
  - M & P Series units (requires M-Net adapter)
  - Lossnay® units
  - PWFY hydronic heat pump units
  - DIDO controllers
  - CITY MULTI® DOAS
  - Interlock setting enables integration of general equipment inputs/outputs and indoor units
- Scheduling
  - Daily
  - Annually
  - Five pattern of weekly seasonal schedule
- Twenty four scheduled events per day, indoor unit model dependent:
  - ON/OFF
  - Mode
  - Temperature Setting
  - Vane Direction
  - Fan
  - Speed
  - Operation Prohibits
- Trend data:
  - Fan operation time
  - Thermo-on time
  - Set temperature
  - Room temperature
  - AI Controller temperature and humidity (requires PAC-YG63-MCA, 2 inputs total for each controller)
- Memory back up via USB (universal serial bus)
- Memory back up via LAN (local area network) port

© 2021 Mitsubishi Electric Trane HVAC US LLC. All rights reserved.

TE-200A CENTRALIZED CONTROLLER

Item	Specifications		
Power Supply	Rated input		100–240 VAC ± 10%; 0.3–0.2 A 50/60 Hz Single-phase
	Fuse		250 VAC 6.3 A Time-Lag type (IEC 60127-2S.S.5)
M-NET power feeding capability			No specifications**Only an MN converter can be connected.
Ambient conditions	Temperature	Operating Range	0° C to +40° C (+32° F to +104° F)
		Non-operating Range	-20° C to +60° C (-4° F to +140° F)
	Humidity		30% to 90% RH (no condensation)
Weight			2.3 kg (5-5/64 lbs)
Dimensions (W x H x D)			11-5/32 × 7-55/64 × 2-17/32 in. (284 × 200 × 65 mm)
Installation conditions			Indoor only **To be used in a business office or similar environment

WEB BROWSER REQUIREMENTS

Item		Requirements
PC	CPU	1 GHz or faster (2 GHz or faster recommended)
	Memory	2 GB or more
	Screen Resolution	1024 x 768 or higher recommended
	OS/Java® execution environment	• Microsoft® Windows® 8.1 • Microsoft® Windows® 10 • Mac OS® X10.11 or later (Only CSV File Download Tool is not guaranteed to work.) * Java® execution environment (Oracle® Java or AdoptOpenJDK) is required. Verified to work properly on Oracle® Java8 (https://www.java.com/download/) and AdoptOpenJDK11 HotSpot (https://adoptopenjdk.net/). * The version of the Oracle® Java can be verified by clicking [Java] in the Control Panel. * Install the Java® execution environment that is appropriate for your Air Conditioner Control Tool. When using a 64-bit Air-conditioner Control Tool, install 64-bit Oracle® Java or AdoptOpenJDK
	Browser	• Microsoft® Internet Explorer® 11 • Microsoft® Edge® • Google Chrome™ Ver. 83 • Safari® 13
	Microsoft® Excel®	• Microsoft® Excel® 2010 or later

	Item	Requirements
Smartphone	Safari® 12	• iPhone 6s (Plus) (iOS 10.1.1 or later) • iPhone 7 (Plus) (iOS 10.1.1 or later) • iPhone SE (iOS 10.1.1 or later) • iPhone XR (iOS 12.1.1 or later)
	Google Chrome™ Ver. 83	• Galaxy SC-04J (Android™ 8.0.0) • HUAWEI P9 (Android™ 6.0 or later) • Xperia Z5 (Android™ 6.0 or later)
Tablet	Safari® 13	• iPad Air 2 (iOS 12.2.2 or later) • 9.7-inch iPad Pro (iOS 10.1.1 or later)
	Google Chrome™ Ver. 83	• MediaPad T2 7.0 Pro (Android™ 5.1.1)

Note: Registered trademarks

- Android is a registered trademark of Google LLC. in the U.S. and other countries.
- Apple is a trademark of Apple Inc., registered in the U.S. and other countries.
- Google is a registered trademark of Google LLC.
- Google Chrome is a registered trademark of Google LLC. in the U.S. and other countries.
- Edge is a trademark or registered trademark of Microsoft Corporation in the U.S. and other countries.
- Internet Explorer is a trademark or registered trademark of Microsoft Corporation in the U.S. and other countries.
- The official name of Internet Explorer is “Microsoft® Internet Explorer Internet browser”.
- iOS is a trademark or registered trademark of Cisco in the U.S. and other countries and is used under license.
- iPad is a trademark of Apple Inc., registered in the U.S. and other countries.
- Mac OS is a trademark of Apple Inc., registered in the U.S. and other countries.
- Microsoft Office Excel is a product name of Microsoft Corporation in the U.S.
- Windows is a trademark or registered trademark of Microsoft Corporation in the U.S. and other countries.
- The official name of Windows is “Microsoft® Windows® Operating System”.
- Safari is a trademark or registered trademark of Apple Inc. in the U.S.
- Nexus is a registered trademark of Google LLC. in the U.S. and other countries.
- Galaxy is a trademark or registered trademark of Samsun Co., Ltd.

Note: Company name or product name that is described in this manual may be a trademark or a registered trademark of each company

Specifications are subject to change without notice.

© 2021 Mitsubishi Electric Trane HVAC US LLC. All rights reserved.

MODEL: AE-200A - SYSTEM CONFIGURATION

*AE-200A is indicated as AE-200
*AE-50A is indicated as AE-50

CONTROLLING 50 OR FEWER UNITS OF EQUIPMENT

1. AE-200

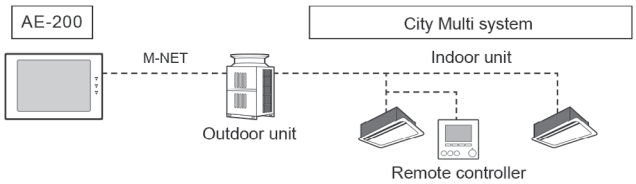

2. EW-50

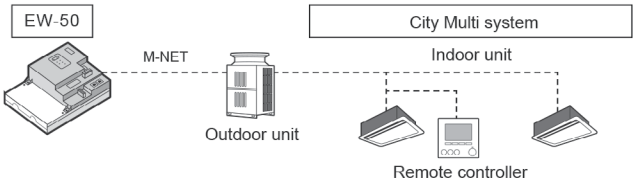

CONTROLLING MORE THAN 50 UNITS OF EQUIPMENT (WITH CONNECTION TO AN AE-200 CONTROLLER)

Note

AE-200 is required when using AE-50

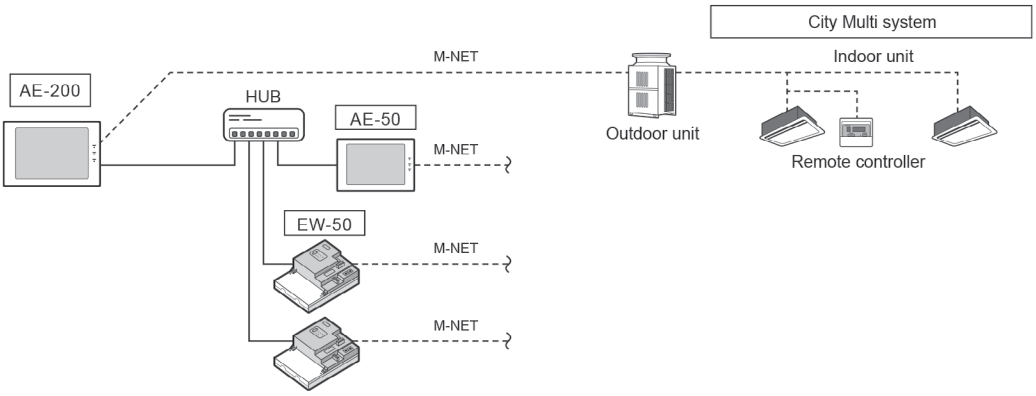

WHEN USING AN APPORTIONED ELECTRICITY BULLING FUNCTION

Notes

AE-200 is required to use a billing function.

AE-200 M-NET cannot be used when a billing function is used

“Charge” license is requited to use a billing function.

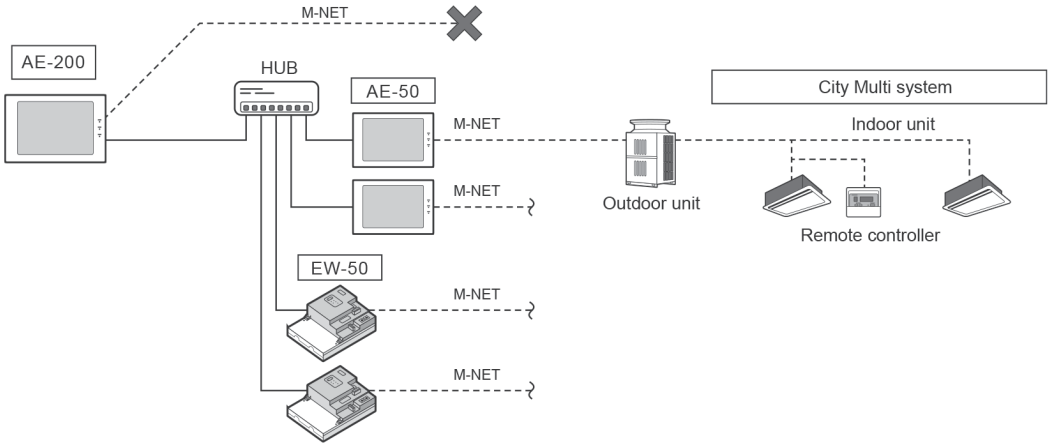

Specifications are subject to change without notice.

© 2021 Mitsubishi Electric Trane HVAC US LLC. All rights reserved.

AE-200A - DIMENSIONS

*AE-200A is indicated as AE-200
*AE-50A is indicated as AE-50

Unit: mm (inch)

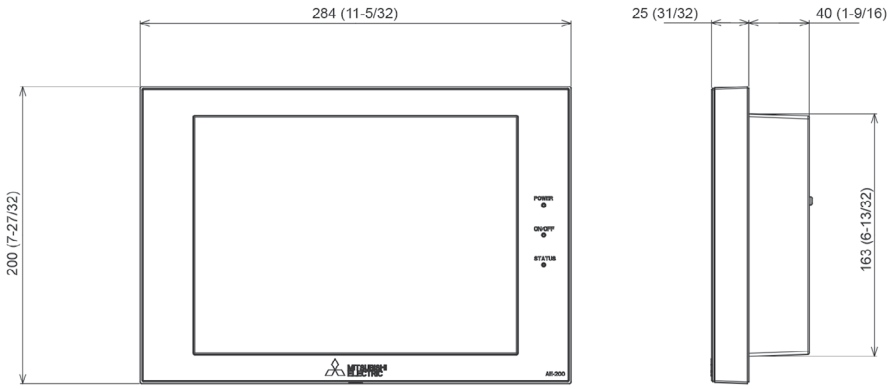

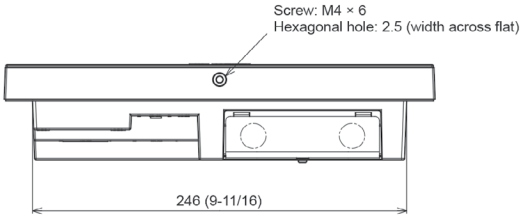

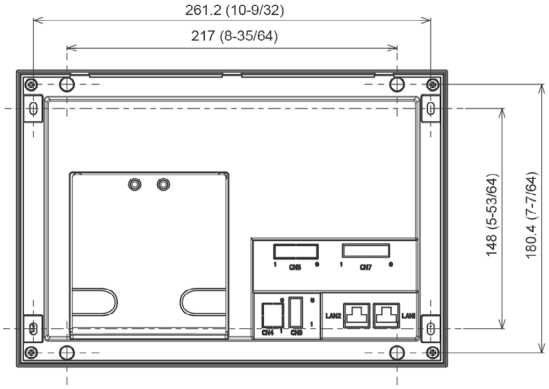

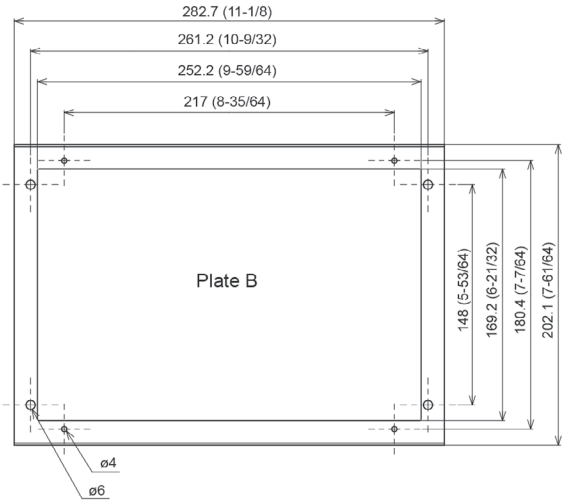

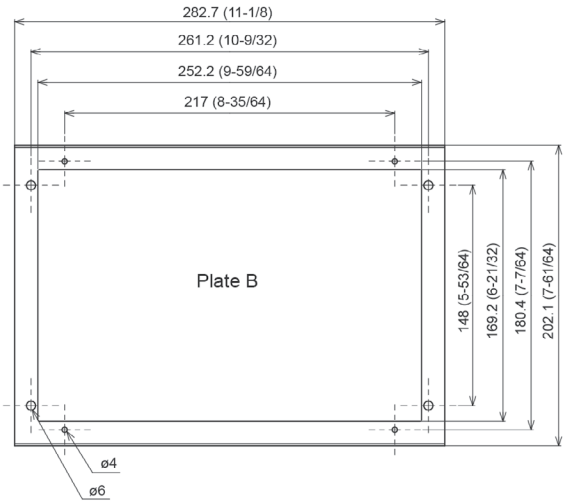

1340 Satellite Boulevard. Suwanee, GA 30024
Toll Free: 800-433-4822 www.mehvac.com

FORM# M_SUBMITTAL_AE-200A - 202104

Specifications are subject to change without notice.

© 2021 Mitsubishi Electric Trane HVAC US LLC. All rights reserved.

MODEL: PAC-YT53CRAU-J

Job Name:
System Reference: Date:

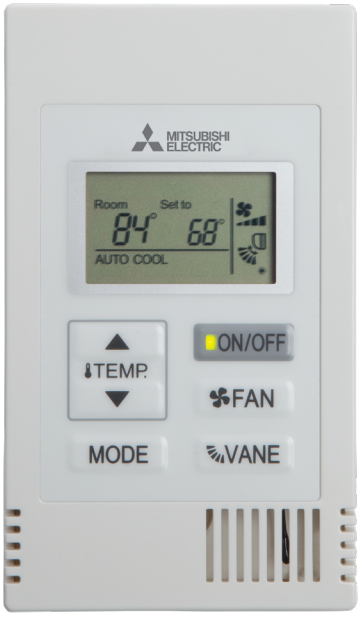

SIMPLE MA REMOTE CONTROLLER (PAC-YT53CRAU-J) SPECIFICATIONS

- Controls group operation for up to 16 indoor units in a single group
- Supports both Fahrenheit and Celsius
- User defined functions:
  - ON/OFF
  - Operation mode: AUTO (R2-Series only), COOL, HEAT, FAN, DRY, SETBACK, or ADD
  - Set temperature
  - Fan speed setting
  - Air flow direction
  - Set temperature range: depending on operation mode and indoor unit connected.
- Set temperature range limit: Simple MA allowable set temperature range can be reduced for cool and heat modes.
- LOSSNAY®: Simple MA for interlocked system can set high/low/Stop on LOSSNAY.
- Room temperature can be sensed either at the indoor unit (default) or at the remote controller.
- Diagnostics: Displays four-digit error code and error unit address.
- Grouping: Same group use only with other PAC-YT53CRAU-J Simple MA Controllers with up to two remote controllers per group.
- Addressing: No addressing required.
- Wiring: Uses two-wire, stranded, non-polar control wire for connecting TB15 connection terminal on the indoor unit.
- Requires crossover wiring for grouping across indoor units.
- Dimensions: 2-3/4 x 9/16 x 4-3/4" (70 x 14.5 x 120mm).

NOTE: A MAC-334IF-E may be needed in order to connect to the indoor unit. Please see the compatibility charts for more information.

SAMPLE SYSTEM

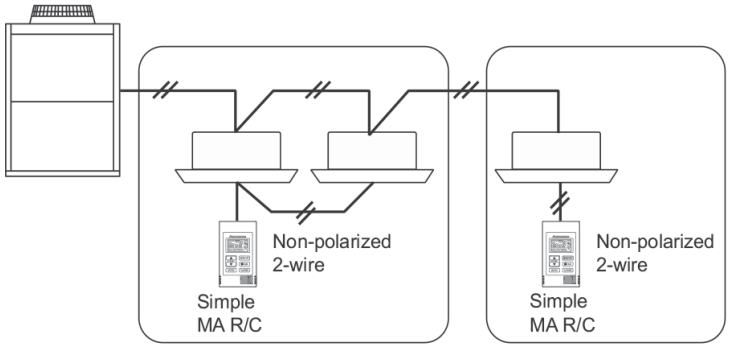

System example

NOTES:

Specifications are subject to change without notice.
© 2021 Mitsubishi Electric Trane HVAC US LLC. All rights reserved.

DIMENSIONS: PAC-YT53CRAU-J

Unit:mm[in.]

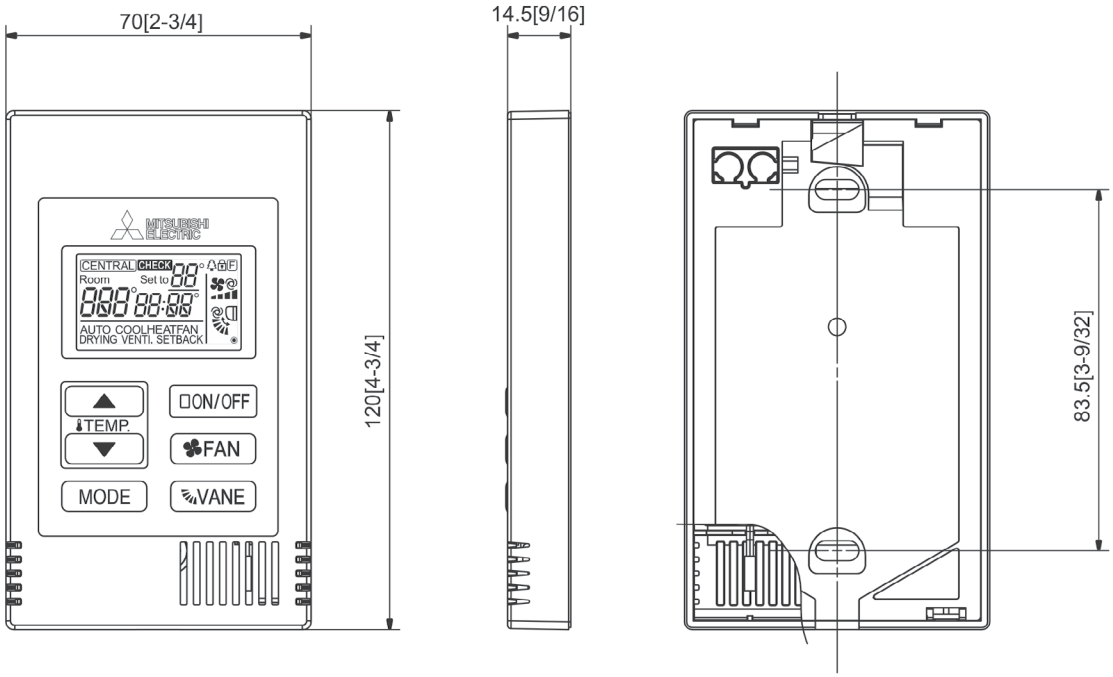

1340 Satellite Boulevard. Suwanee, GA 30024
Toll Free: 800-433-4822 www.mehvac.com

FORM# M_SUBMITTAL_PAC-YT53CRAU-J - 202104

Specifications are subject to change without notice.

© 2021 Mitsubishi Electric Trane HVAC US LLC. All rights reserved.

Warranty Document

MITSUBISHI ELECTRIC TRANE HVAC US LLC

1340 Satellite Boulevard
Suwanee, GA 30024

LIMITED WARRANTY STATEMENT

Mitsubishi Electric CITY MULTI® Split Air-conditioner and Heat-pump Systems

Subject to the terms and conditions of this Limited Warranty Statement (the "Limited Warranty"), MITSUBISHI ELECTRIC TRANE HVAC US LLC ("METUS") warrants to the original purchaser of this CITY MULTI system (as used herein, "System" shall mean CITY MULTI outdoor and indoor components connected via refrigerant piping and electrical wiring) purchased on or after **May 1, 2019,** from a licensed HVAC contractor and installed by such contractor in the continental United States, Alaska and Hawaii, that:

A. The parts are warranted to the original owner for a period of one (1) year from the date of installation by a licensed contractor. If it should prove defective due to improper workmanship and/or material for a period of one (1) year from the date of installation, METUS will replace any defective part without charge for the part. Replacement parts are warranted for the remainder of the original 1-year warranty period. Parts used for replacement may be of like kind and quality and may be new or remanufactured. Defective parts must be made available to METUS in exchange for the replacement part and become the property of METUS.

B. The compressor is warranted to the original owner for a period of seven (7) years from the date of installation by a licensed contractor. If the compressor should prove defective due to improper workmanship and/or material for a period of seven (7) years from the date of installation, METUS will replace any defective compressor without charge for the compressor. Replacement compressors are warranted for the remainder of the original 7-year warranty period. Compressors used for replacement may be of like kind and quality and may be new or remanufactured. Defective compressors must be made available to METUS in exchange for the replacement compressor and become the property of METUS.

C. Notwithstanding the foregoing, the parts and compressor will be warranted to the original owner for a period of ten (10) years from the date of installation if (1) the System is designed by a Diamond Designer using the Diamond System Builder™ (2) the installing contractor has successfully completed all METUS-approved CITY MULTI training courses, and (3) the contractor has timely submitted a completed and approved Diamond System Builder™ file per the METUS Extended Warranty Process. If any parts and/or the compressor should prove defective due to improper workmanship and/or material for a period of ten (10) years from the date of installation, METUS will replace any defective parts or compressor without charge for the part or compressor. The replacement parts and/or compressor are warranted for the remainder of the original 10-year warranty period. Parts and/or compressors used for replacement may be of like kind and quality and may be new or remanufactured. Defective parts and/or compressors must be made available to METUS in exchange for the replacement parts and become the property of METUS.

D. NO LABOR. This Limited Warranty does NOT include labor or any other costs incurred for service, maintenance, repair, removing, replacing, installing, complying with local building and electric codes, shipping, handling or replacement of the System, compressors or any other parts. The owner is solely responsible for all labor and other costs of maintaining, installing, replacing, disconnecting or dismantling the System and any parts (such as filters) in connection with owner-required maintenance, including but not limited to cleaning and/or replacing air filters for each indoor unit of the System, and this Limited Warranty does not cover labor or other costs associated with such owner-required maintenance. Please consult the Operations Manual and other applicable technical documentation for air filter cleaning and other maintenance procedures.

E. PROPER INSTALLATION; PROOF OF PURCHASE. This Limited Warranty applies only to Systems that are installed by licensed HVAC contractors who have completed all METUS-required CITY MULTI training classes and who install the Systems in accordance with (i) all applicable building codes and permits; (ii) METUS installation and operation instructions; and (iii) good trade practices. METUS may require satisfactory proof of purchase, proper installation and start-up of the System as a condition to providing replacement parts or compressors under this Limited Warranty.

BEFORE REQUESTING SERVICE, please review the Operations Manual and technical documentation for your System to confirm the electric power supply and that user controls are properly adjusted for the System.

1) TO OBTAIN WARRANTY SERVICE:

a) Contact the licensed HVAC contractor who installed your System or another licensed HVAC contractor or servicer, or an authorized CITY MULTI distributor (whose name and address may be obtained on the METUS website at www.mehvac.com) within the applicable warranty time period.

b) Proof of the installation date is required when requesting warranty service. Present the sales receipt, building permit or other document which establishes the date of installation. In the absence of acceptable proof, this Limited Warranty shall be deemed to begin one hundred twenty (120) days after the date of manufacture stamped on the System.

c) This Limited Warranty applies only to Systems purchased on or after **May 1, 2019**, only while the System remains at the site of the original installation, and only to locations within the continental United States, Alaska and Hawaii.

d) All repairs under this Limited Warranty must be made by a licensed HVAC contractor or servicer.

1) THIS LIMITED WARRANTY DOES NOT COVER: property damages, malfunction or failure of the System, or personal injury caused by or resulting from: (a) accident, abuse, negligence or misuse; (b) operating the System in a corrosive or wet environment, including those containing chlorine, fluorine or any other hazardous or harmful chemicals or environmental factors, including sea- or salt-water; (c) installation, alteration, repair or service by anyone other than a licensed contractor or other than pursuant to the manufacturer's instructions; (d) improper matching of System components; (e) improper sizing of the System; (f) improper or deferred maintenance contrary to the manufacturer's instructions; (g) physical abuse to or misuse of the System (including failure to perform any maintenance as described in the Operation manual such as air filter cleaning, or any System damaged by excessive physical or electrical stress); (h) Systems that have had a serial number or any part thereof altered, defaced or removed; (i) System used in any manner contrary to the Operation Manual; (j) freight damage; or (k) events of force majeure or damage caused by other external factors such as lightning, power surges, fluctuations in or interruptions of electrical power, rodents, vermin, insects, or other animal- or pest-related issues.

2) THIS LIMITED WARRANTY ALSO EXCLUDES: (a) SERVICE CALLS WHERE NO DEFECT IN THE SYSTEM COVERED UNDER THIS WARRANTY IS FOUND: (b) System installation or set-ups; (c) Adjustments of user controls; (d) Systems purchased or installed outside the continental United States, Alaska and Hawaii; or (e) Systems purchased or installed prior to **May 1, 2018**. Consult the Operations Manual for information regarding user controls.

3) This Limited Warranty shall not be enlarged, extended or affected by, and no obligation or liability shall arise or grow out of, METUS providing, directly or indirectly, any technical advice, information and/or service to the original owner, contractor, distributor, or otherwise providing assistance in connection with the System.

4) EXCEPT AS OTHERWISE PROVIDED IN THIS LIMITED WARRANTY, METUS MAKES NO OTHER WARRANTIES OF ANY KIND WHATSOEVER REGARDING THE SYSTEM. METUS DISCLAIMS AND EXCLUDES ALL WARRANTIES NOT EXPRESSLY PROVIDED HEREIN AND ALL REMEDIES WHICH, BUT FOR THIS PROVISION, MIGHT ARISE BY IMPLICATION OR OPERATION OF LAW, INCLUDING, WITHOUT LIMITATION, THE IMPLIED WARRANTIES OF MERCHANTABILITY, NON-INFRINGEMENT OF THIRD PARTY RIGHTS, AND OF FITNESS FOR ANY PARTICULAR PURPOSE. NO ONE IS AUTHORIZED TO CHANGE THIS LIMITED WARRANTY IN ANY RESPECT OR TO CREATE ANY OTHER OBLIGATION OR LIABILITY FOR METUS IN CONNECTION WITH THE SYSTEM. METUS DISCLAIMS ALL LIABILITY FOR THE ACTS, OMISSIONS AND CONDUCT OF ALL THIRD PARTIES (INCLUDING, WITHOUT LIMITATION, THE INSTALLING CONTRACTOR) IN CONNECTION WITH OR RELATED TO THE SYSTEM.

5) UNDER NO CIRCUMSTANCES SHALL METUS BE LIABLE FOR ANY INDIRECT, INCIDENTAL, SPECIAL, PUNITIVE OR CONSEQUENTIAL DAMAGES INCLUDING, WITHOUT LIMITATION, INFRINGEMENT OF THIRD PARTY RIGHTS, LOST GOODWILL, LOST REVENUES OR PROFITS, WORK STOPPAGE, SYSTEM FAILURE, IMPAIRMENT OF OTHER GOODS, COSTS OF REMOVAL AND REINSTALLATION OF THE SYSTEM, LOSS OF USE, INJURY TO PERSONS OR PROPERTY ARISING OUT OR RELATED TO THE SYSTEM WHETHER BASED ON BREACH OF WARRANTY, BREACH OF CONTRACT, TORT OR OTHERWISE, EVEN IF METUS HAS BEEN ADVISED OF THE POSSIBILITY OF SUCH DAMAGE. IN NO EVENT SHALL METUS' LIABILITY EXCEED THE ACTUAL PURCHASE PRICE OF THE SYSTEM WITH RESPECT TO WHICH ANY CLAIM IS MADE.

6) **SOME STATES DO NOT ALLOW LIMITATIONS ON WARRANTIES OR EXCLUSIONS OR LIMITATION OF DAMAGES, SO THE ABOVE LIMITATIONS OR EXCLUSIONS MAY NOT APPLY.**

7) **DISPUTE RESOLUTION.** For any dispute with METUS, you agree to first contact us by phone (800-433-4822) or e-mail (CustomerCare@hvac.mea.com) or U.S. Mail at MITSUBISHI ELECTRIC TRANE HVAC US LLC ATTN: Customer Care, 1340 Satellite Blvd., Suwanee, GA 30024, and attempt to resolve the dispute with us informally by providing your name, address, and contact information and describing the nature of the dispute. In the unlikely event that METUS has not been able to resolve a dispute with you within 60 days of your original informal claim (or sooner if, in METUS' opinion, a dispute is not likely to be resolved within 60 days), we each agree to resolve any claim, dispute, or controversy arising out of or in connection with or relating to this Limited Warranty, or the breach or alleged breach thereof (collectively, "Claims"), by binding arbitration before an arbitrator from Judicial Mediation and Arbitration Services ("JAMS") located in Gwinnett County, Georgia. JAMS may be contacted at www.jamsadr.com and will require you to pay an initial filing fee set by JAMS (unless you successfully apply for a waiver of this fee from JAMS). All other JAMS costs associated with the arbitration will be borne by METUS. The arbitration will be conducted in Gwinnett County, Georgia, unless you request an in-person hearing where you live, or if you and METUS agree otherwise. If the arbitrator decides in your favor, the award may include your costs of arbitration, your reasonable attorneys' fees and your reasonable costs for any expert and other witnesses, and any judgment on the award rendered by the arbitrator may be entered in any court of competent jurisdiction. If the arbitrator makes an award in your favor greater than METUS's last written offer, METUS will pay you the greater of the award or $500, plus your reasonable attorney's fees, if any, and reimburse any reasonable expenses (including reasonable expert witness fees and costs) that are reasonably accrued for investigating, preparing, and pursuing your claim in arbitration, as determined by the arbitrator or as agreed to by you and METUS. Any judgment on the award rendered by the arbitrator may be entered in any court of competent jurisdiction. You may sue under state law in a small claims court of competent jurisdiction without first engaging in arbitration, but you must engage in arbitration before suing under the Federal Magnuson-Moss Act.

8) All claims must be brought in the parties' individual capacity, and not as a plaintiff or class member in any purported class or representative proceeding. This waiver applies to class arbitration unless such arbitration is necessary to effectuate the enforcement of the court class action waiver or in the event that class arbitration is expressly agreed to by METUS. You agree that you and METUS are each waiving the right to a trial by jury or to participate in a class action.

9) You may opt-out of the foregoing arbitration and class action/jury trial waiver provision of this Limited Warranty by notifying METUS in writing within 30 days of purchase. Such written notification must be sent to MITSUBISHI ELECTRIC TRANE HVAC US LLC ATTN: MEUS Legal Department, 5900-A Katella Avenue, Cypress, CA 90630, and must include (1) your name, (2) your address, (3) your warranted product's serial number, and (4) a clear statement indicating that you do not wish to resolve disputes through arbitration and demonstrating compliance with the 30-day time limit to opt-out.

10) **If any clause herein is found to be illegal or unenforceable, that clause will be severed from this Limited Warranty and the remainder of the Limited Warranty will be given full force and effect. As noted above, if a class action waiver of both court and arbitration class actions is found unenforceable, class arbitration will be expressly allowed under the Limited Warranty.**

11) **This Limited Warranty gives the original owner specific legal rights and the original owner may also have other rights that vary from state to state.**

12) **This Limited Warranty is valid only in the continental United States, Alaska and Hawaii, and it is not transferable.**