SENNEBOGEN

PORT MATERIAL HANDLER

WITH A REACH OF UP TO 29 m

maXcab / masterCab / up to 170 t / 29 m / 391 kW / Stage V

875E Hybrid

The universal machine.

A smart approach to port logistics – the giant material handler with an operating weight of up to 170 t is right at home in the ports of this world. Numerous configuration options and customer-specific undercarriage solutions make it the ideal machine for industrial applications and demanding material handling tasks in ports.

A long-term investment

The E-series is characterised by robust components, and an intelligent and resource-efficient machine design – the machine retains its value over the long-term, even with demanding continuous use.

Energy efficiency

Appreciated around the world, thanks to drives that are resource- and environmentally-friendly and the Green Hybrid energy recovery system – whether with diesel drive or as an electric version.

Occupational safety

Thanks to the precisely controlled movements and the numerous safety features, you can work effortlessly and safely throughout your day.

Modular variety

Unique machine variety – we build the perfect machine to meet the needs of your port.

Maximum comfort

The spacious cabs are designed with the needs of the operator in mind – comfortable and spacious with sophisticated features.

Maintenance & Service

Intelligent fleet management and machine status monitoring via the SENtrack portal as well as unique accessibility of machine components.

AN INVESTMENT THAT PAYS OFF.

The durability and reliability of the SENNEBOGEN Green Line is based on decades of experience in the design of high-quality crane and material handling technology. We can find the perfect solution for every port application, ensuring you can handle general cargo and bulk materials in an efficient and resource-saving way.

Low operating costs thanks to energy-efficient electric drives and energy recovery through the Green Hybrid system

Manageable and service-friendly technology for maximum machine availability

Consistent performance thanks to robust steel construction, and high-quality drive and control components from renowned manufacturers

1,200 t

High handling capacity of up to 1,200 t per hour* reduces the berthing time of ships

Sophisticated technology thanks to the consistent further development up to the 5th generation of the E-series – for demanding material handling

Durable and robust in extreme weather and harsh operating conditions, works equally well in the cold of the Arctic Circle or the heat of Dubai

* The specified handling capacity is a reference value that can be achieved with the appropriate grab for the machine (see Attachments catalog). Actual handling capacities depend on the individual loading and unloading situation in the port and are the result of various parameters (e.g. lifting height, angle of rotation, ship shape, grab fill level, grab).

>25,000
operating hours
for this 875 E in Turkey

Advanced. The E series.

LONG SERVICE LIFE, HIGH VALUE RETENTION

- Reliable and powerful thanks to its robust construction and high-quality components.
- Temperature-controlled cooling system, designed and tested for heavy-duty applications and high ambient temperature

SOPHISTICATED, STATE-OF-THE-ART TECHNOLOGY

- In the 5th generation – decades of experience in designing and constructing material handlers

GREEN EFFICIENCY

EASY TO MAINTAIN AND SERVICE

- Technology that can be mastered and no over-engineering, optimum accessibility to all components

ENVIRONMENTALLY-FRIENDLY DRIVE TECHNOLOGY

- State-of-the-art engine, drive and emission systems in line with the latest technology standards (stage V)
- Large-scale pipes and valves for maximum efficiency

50 %
Save operating costs
by significantly reducing
energy consumption

eGREEN

SENNEBOGEN – WORLD LEADER IN ELECTRIC MATERIAL HANDLERS.

Over the last **35 years**, we have implemented by far the most electrical applications

- A complete solution direct from the manufacturer - detailed route analyses and individual power supply project planning, tailored specifically to your application
- A variety of solutions for power supplies, voltage types and emergency operating units ex works
- No fuelling stops or need to store fuel - always ready for use
- Service intervals twice as long as for diesel engines and lower service costs: no need for fuel / oil filters and oil changes
- High value retention and significantly longer service life
- No exhaust gas - good for the environment, good for people
- Low-noise and vibration-free operation for greater working comfort
- Cleaner engine compartment even after long service life

GREEN HYBRID – THE MOST SOPHISTICATED ENERGY RECOVERY TECHNOLOGY ON THE MARKET

Save up to

50 %

energy

GREEN HYBRID ENERGY RECOVERY TECHNOLOGY

Energy recovery with a safe and intelligent design: Watch the video to find out how the SENNEBOGEN Green Hybrid System makes port material handling even more efficient.

https://www.sennebogen.com/green-hybrid

1

Boom lowers, gas compresses

2

Energy storage module consisting of nitrogen piston accumulators

3

The nearly constant force transmission throughout the cylinder cycle supports the next boom lift

SENNEBOGEN *Green*Hybrid

Protects the environment, saves energy, reduces your costs.

- System advantages: large system volume and constant force transmission over the entire cylinder cycle
- System stability through constant pressure and temperature control
- Functional safety through the use of standard hydraulic components in the protected rear area of the machine
- System can be optimally adjusted to the individual task, depending on the weight of the material being handled
- Simple inspection and system filling via SENCON control system from the operator's seat

SAFETY FIRST.

Enjoy a safe work environment thanks to numerous safety features developed especially for port use. Protecting people, port and machine.

HOW TO OPERATE THE SAFETY BOOM LIFT

This video will show you how the SENNEBOGEN Safety Boom Lift works.

https://www.sennebogen.com/safety-boom-lift

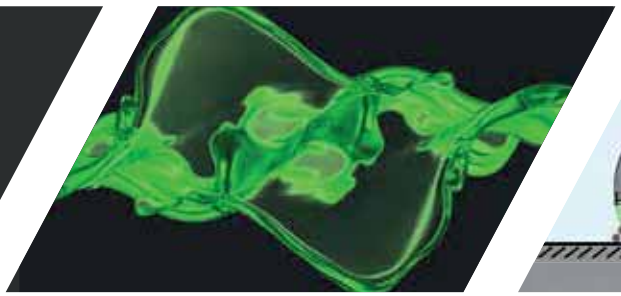

Bio Oil - Panolin

for extended oil change intervals, with safe environmental compatibility

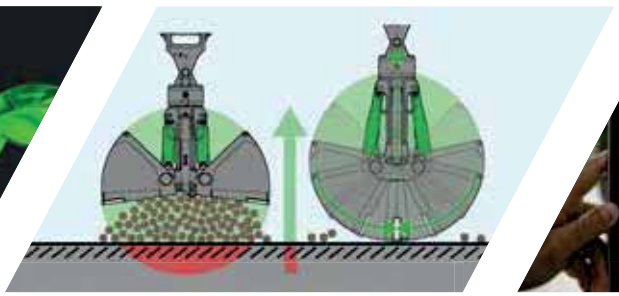

Safety Boom Lift

Grab automatically lifts as it closes, protecting ship hulls, port surfaces, equipment and the grab itself

SENtrack

Maintain fleet management safety by monitoring the condition of your machines

Component safety

maximum service life thanks to the robust steel construction - produced in our very own subsidiary

Safe & ergonomic

optimum cab and machine component accessibility via stairs and ascents

Powerful LED spotlights

for optimal illumination of the work area

Load moment limitation

Protection of equipment by switching off in the event of an impermissible load

Optimum camera monitoring

of all safety-relevant areas*

* Cameras are installed as standard on the righthand side and to monitor the rear area. Additional cameras, e.g. on the stick, are available on request.

EXPERIENCE VARIETY
FOR EVERY TYPE OF MATERIAL

Today general cargo, tomorrow bulk cargo – working in the port means staying flexible from day to day. The entire range of material handling technology can be flexibly operated using the quick change system on the stick and the SENNEBOGEN port machines' powerful hydraulics.

Bulk material (feed, coal, etc.)

Scrap handling

Timber grab

Big Bag loading

Timber spreader/wooden pallet loading

Pulp spreader

Paper coil grab

Quick change system with lifting beam

Vacuum lifter

QUICK AND EASY GRAB CHANGE

Watch the video to see how quick and easy it is to change the grab with the quick change system on the stick!

https://www.sennebogen.com/quick-coupler

A MODULAR DESIGN.
NUMEROUS APPLICATIONS.

EQUIPMENT

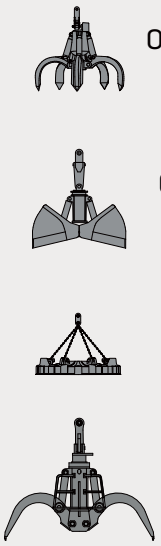

Orange peel grab

Clamshell grab

Magnet plate

Timber grab

Quick coupler

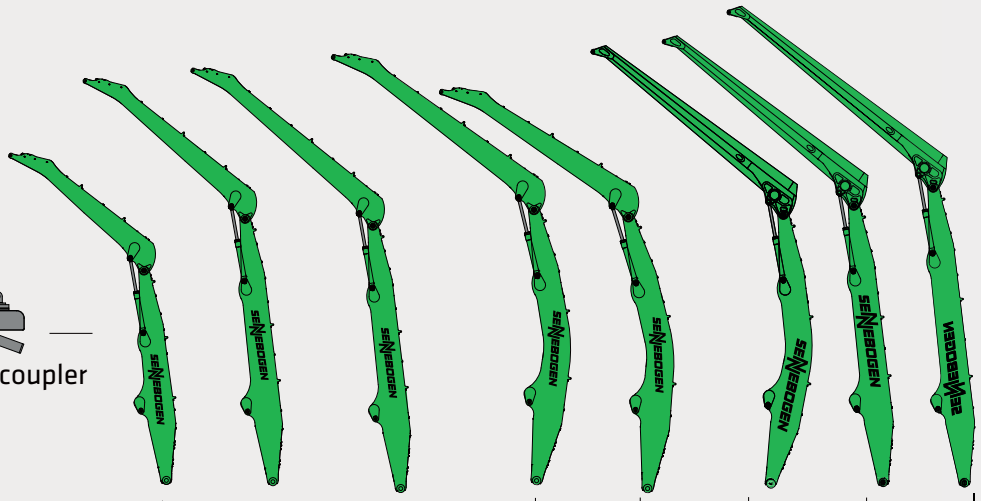

K21 K26 K27 B26 B24 B26 Port K27 Port K29 Port

K = Compact boom
B = Banana boom for greater reach depth
Port equipment for longer reach and/or more load capacity

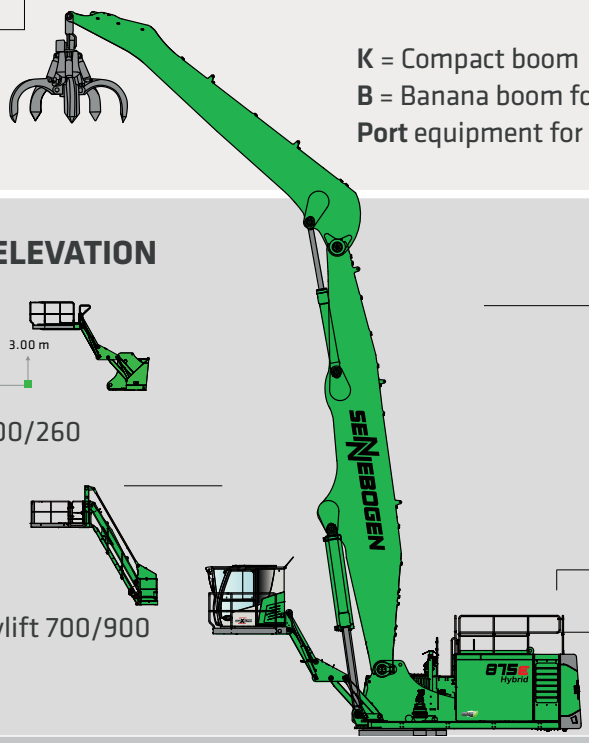

CAB

Maxcab Industry

Mastercab

CAB ELEVATION

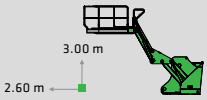

E300/260

Skylift 700/900

OPTIONS

Diesel-hydraulic drive

Electrohydraulic drive

Motorized cable reel

Transformer

UPPERCARRIAGE

UNDERCARRIAGE

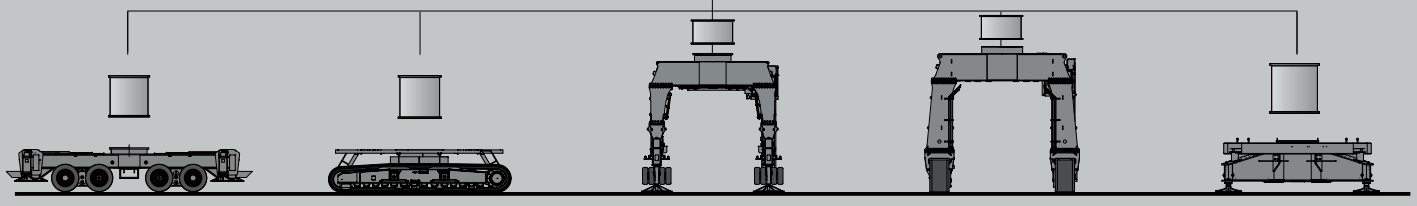

Mobile | Crawler | Mobile gantry | Crawler gantry | 4-point-pedestal

Subject to technical changes. Additional options available upon request.

WHAT DOES YOUR MACHINE LOOK LIKE?

Configure your individual machine using our modular system. The great variety of solutions that we can implement in this way is unique.

CUSTOM CONFIGURATION

More than 16,000 unique material handling solutions can be delivered through SENNEBOGEN's modular machine design - watch the video now!

https://www.sennebogen.com/versatility

MAXIMUM COMFORT.

Everything in view

The spacious cab with panoramic view gives you a practical overview of your work area. The window in the floor makes it possible to carry out precise loading operations even in close proximity. The safety cameras provide support and allow you to monitor the critical areas conveniently via the monitoring system in the cab.

Easy control

The intelligent SENCON control system gives you quick and easy feedback on the machine's condition. Thanks to the intuitive user interface, it has never been easier to monitor energy consumption and utilization, control the desired working modes and contribute towards reducing operating costs.

For your health

Operators spend many hours in their working position. The back-friendly comfort seat, adjustable armrests, joysticks that sit comfortably in the hand, and the optimally arranged controls make daily work as easy as possible.

Pleasant indoor climate

Whether in warmer areas or in ports with sub-zero temperatures, you can enter a work space with a comfortable temperature every day and concentrate on the essentials of work thanks to automatic heating and air conditioning.

"We welcome regular feedback from operators to ensure the work space is configured perfectly."

ROBERT AUMÜLLER,
Head of the Port Business Unit

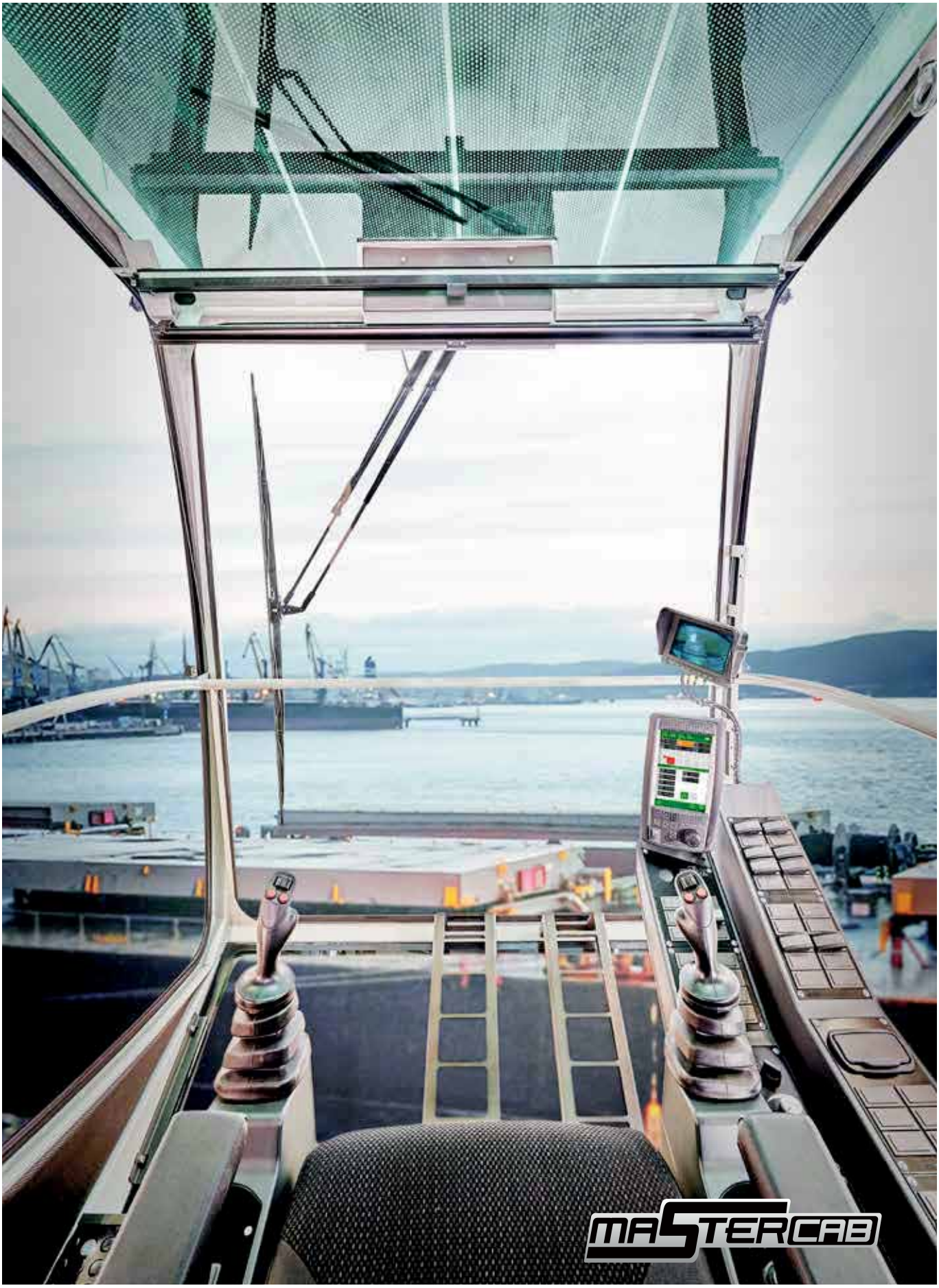
MASTERCAB

CAB HIGHLIGHTS

Maxcab premium cab in the industrial edition

The large capacity cab for the best all-round view of the port

IN SERIES	MAXCAB	MASTERCAB
ENTRANCE	Sliding door incl. sliding window	Easy access through wide cab door
WINDSHIELD	Undivided windshield made from bullet proof glass, rigidly glazed	Tinted double glazing for side windows
SKYLIGHT	Skylight made from bullet proof glass	Large skylight with sun protection slats and windshield wiper with washing system
FLOOR WINDOW	–	Bullet proof glass floor window
WIPERS	Wipers for skylight	Parallelogram wipers for harsh weather conditions
	Wiper and washer system for front windshield	–
AIR CONDITIONER	Automatic heating/air conditioning with fresh air and recirculating air filter	Automatic air conditioning with optimised de-icing and demisting function
FLOODLIGHTS	Floodlights integrated into roof	Floodlights integrated into the uppercarriage and roof
FOLDAWAY SEAT	–	Foldaway seat in cab
RADIO	✓	✓
SENCON CONTROL AND DIAGNOSTIC SYSTEM	✓	✓
OPTIONS		
AIR-CONDITIONED SEAT	✓	✓
RADIO	✓	✓
COOLING BOX BEHIND THE OPERATOR'S SEAT	✓	✓
PROTECTIVE GRILLE ON SKYLIGHT AND WINDSHIELD	–	✓
SUN PROTECTION PACKAGE	✓	✓

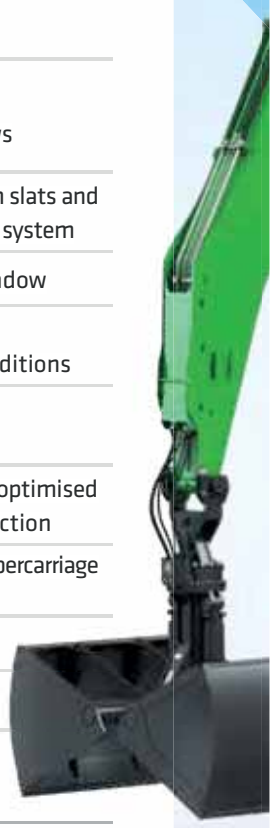

ALWAYS THE RIGHT **VIEWING ANGLE**

The name 'Skylift' can be taken literally! Depending on the version and undercarriage being used, the flexible cab adjustment allows you to look into a ship's hull from around 13.5 metres. Thanks to a sophisticated system of steps, ascents and railings, access to the cab and maintenance points on the uppercarriage is safe and comfortable.

PROFESSIONAL **FLEET MANAGEMENT**

SENtrack

1. Reduce service costs

The dashboard is used to monitor the machine and its main operating parameters (temperatures, consumption). If key figures deviate significantly from the target value, preventive maintenance can be arranged.

2. Reduce consumption

You will receive daily updated insights into your fleet processes: Easily identify and optimize times when machines are idle or change set parameters when machines are underloaded to reduce consumption.

3. Improve productivity

With just a few clicks, you can identify and optimize machine capacity, analyse routes if required and thus make your port processes more profitable.

4. Safeguard your investment

Practical alarm messages inform you about critical machine conditions. In the event of irregular movements, the machine can also easily be deactivated remotely.

"What if you could receive real-time data from all your machines with just one click and so increase your productivity? SENNEBOGEN's SENtrack telematic system makes this possible."

MAINTENANCE AND SERVICE.

KEEP IT SIMPLE. WITH MANAGEABLE TECHNOLOGY.

Reliable and practical technology makes life easier. Where electronics add no value, we rely on hydraulics and electrical systems.

We make you happy, not reliant. With cost-effective components and fewer process steps, you can take care of your own machine.

The most important components, such as the accumulator module or the electrical distributor, are all easily accessible from a central point for straightforward checking and trouble-shooting.

The SENCON control system supports you with diagnostics and makes troubleshooting easier. So your machine is back in action more quickly.

All maintenance and service points are clearly arranged and easily accessible. The clear labeling of components makes finding your way around easy.

TECHNICAL DATA, EQUIPMENT

MACHINE TYPE

MODEL (TYPE)	875 Hybrid

DIESEL ENGINE

TYPE	Stage V: Cummins X15 FR11813[1] Rated Power: 391 kW/1800 rpm Operating point standard: 391 kW/1800 rpm Operating point ECO: 374 kW/1650 rpm Stage IIIa: Caterpillar C15 Acert Rated power: 433 kW/2100 rpm Operating point standard: 433 kW/1800 rpm Operating point ECO: 423 kW/1650 rpm
	both: Automatic idle stop
COOLING	water-cooled, charge air cooling, coolant cooling
DISPLACE-MENT	approx. 14 l (V) / approx. 15 l (IIIa)
NUMBER OF CYLINDERS	6
BATTERIES	2 x 210 Ah, battery disconnect switch
ELECTRICAL SYSTEM	24 V Alternator: 105 A (V) / 95 A (IIIa) Starter: 9 kW (V) / 8 kW (IIIa)
OPTIONS	electrically heated fuel pre-filter water separator 24 V (IIIa)
	Engine block heater
	Engine oil preheating
	Additional cyclone pre-separator for use in dusty environments
	Electric fuel pump

TANK CAPACITY

FUEL	2100 l
ADBLUE	105 l
HYDRAULIC TANK	1400 l
COOLANT	approx. 115 l
ENGINE OIL	approx. 45 l (V) / approx. 68 l (IIIa)
CENTRAL LUBRICATION SYSTEM	Automatic central lubrication for equipment and slewing ring, display of fault and empty message via SENCON
	Lubrication pump with 16 kg reservoir (for min. 400 operating hours)

UPPERCARRIAGE

DESIGN	Torsion-resistant box design, precision crafted, steel bushings for boom mountings. Service-friendly design, engine installed in the longitudinal direction
COOLING SYSTEM	Cooling system with 3 cooling circuits and demand-driven fan control consisting of: Coolant cooling and hydraulic oil cooling, hydraulically driven, thermostatically controlled incl. fan reversal; charge air cooling driven directly by engine
OPTIONS	LED lighting package
	Swing bearing brake via foot pedal
	Fire extinguisher
	Maritime climate paint
	Low temperature packages
	Electrical hydraulic tank preheating
	Magnet generator 25/33 kW

ELECTRIC DRIVE

OPTIONS	**Type:** 390 kW, standard with frequency converter
	Power: Total connected load 720 kVA, machine side fuse 800 A (also with generator) at 400 V - motor start via frequency converter
	IP protection class: IP 55 standard, (IP 65 optional)

Optional: Power supply via motorized cable reel

[1] incl. exhaust gas aftertreatment (diesel particulate filter, SCR catalytic converter, AdBlue tank)

TECHNICAL DATA, EQUIPMENT

HYDRAULIC SYSTEM

Load Sensing/LUDV hydraulic system, hydraulically controlled work functions	
DELIVERY RATE	2x 475 l / min and 1x 274 l/min for slewing drive in the closed circuit
OPERATING PRESSURE	up to 350 bar
CONTROL SYSTEM	Proportional, precision hydraulic actuation of work movements, 2 hydraulic servo joysticks for the work functions, additional functions via switches and foot pedals
SAFETY	Hydraulic circuits safeguarded with safety valves
	Emergency lowering of the equipment in the case of engine standstill
	Pipe fracture safety valves for lift and stick cylinders
OPTIONS	Bio-oil filling
	Tool Control for programming pressure/ rate of up to 10 tools
	Load torque warning with capacity display
	Overload safeguard with shutdown
	High-performance filtration with long-term change interval, SENNEBOGEN HydroClean micro-filter system with water separator

SLEWING DRIVE

GEARBOX	Compact planetary gear with bent-axis hydraulic engine, integrated brake valves
PARKING BRAKE	Spring-loaded multi-disk brake
SLEWING RING	Strong, 3-row slewing ring, sealed. Externally geared slewing ring with 360° protection and pinion lubrication
SLEWING SPEED	0-5min^{-1}, stepless
SWING TORQUE	430 kNm

CAB[2]

CAB TYPE	Maxcab Industry, can be elevated by 3 m and moved forward by 2.6 m
CAB FEATURES	Maxcab Industry with sliding door incl. sliding window and undivided, flat windshield made from bullet proof glass, rigidly glazed, roof extended forward, bullet proof skylight, wipers and wash system for windshield, lower windshield wiper with washer nozzle, wiper for skylight, vibration damped, radio with antenna and loud speaker, 2 floodlights integrated into the front of the roof, SENCON control and diagnostic system
OPTIONS	Spacious Mastercab
	Skylift cab elevation (elevation 9 m)
	Skylift cab elevation (elevation 7 m)
	Windshield / skylight made of bullet proof glass (Mastercab)
	Polycarbonate safety glass
	Protective roof guard, FOPS if applicable
	Protective front guard
	Carbon filter for circulation/outside air
	Auxiliary heating system
	Air-conditioned seat
	Radio
	Cooling box

[2] Vibration level: Max. Hand/Arm (acc. ISO 5349-2001) < 2.5 m/s^2
and max. Body (acc. ISO/TR 25398: 2006) < 0.5 m/s^2

TECHNICAL DATA, EQUIPMENT

UNDERCARRIAGE

MOBILE	Mobile undercarriage MS210 with integrated 4-point outriggers, all-wheel drive powered by a direct-mounted variable-displacement hydraulic engine, automatically operated brake valve and 2 stage power-shift transmission. Planetary axles with integrated steering cylinder, all-wheel drive
WIDTH	4450 mm
TIRE TYPE	Solid rubber 14.00-24 (16x); optional: 16.00-25
BRAKES	hydraulic
OUTRIGGER SIZE	Ø 1,300 mm
TRAVEL SPEED	0 – 6 km/h (mobile)

CRAWLER

Crawler undercarriage with hydraulic travel drive on each chassis side integrated in the chassis frame by an axial piston engine via compact planetary gears, spring-loaded parking brake, hydraulically ventilated multi-disk brake

UNDERCAR-RIAGEWIDTH	6,800 m
TRACK GAUGE	5,800 mm
PLATE WIDTH	1,000 mm
UNDERCAR-RIAGE LENGTH	8,500 mm

MOBILE GANTRY

WHEEL GAUGE	5,850 mm
TIRE TYPE	355/65-15 pneumatic tires; optional: 355/65-15 solid rubber
BRAKES	hydraulic
OUTRIGGER SIZE	Ø 1,600 mm
TRAVEL SPEED	2 – 4 km/h

CRAWLER GANTRY

UNDERCAR-RIAGEWIDTH	7,210 mm
TRACK GAUGE	5,850 mm
PLATE WIDTH	900 mm
UNDERCAR-RIAGE LENGTH	8,450 mm
RAIL GANTRY	Customized, tailored to your application, with hydraulic travel drive, 40 m/min travel speed
OPTION	Pylon extension

Option:
Mobile gantry

Optional:
Customized rail gantry

Subject to technical changes. Additional options available upon request.

TECHNICAL DATA, EQUIPMENT

EQUIPMENT

REACH	up to 29 m
CYLINDERS	Hydraulic cylinders with high-quality sealing and guide elements, end position damping, sealed bearing points; all cylinders coated, nickel-plated and chromium-plated in a way that is suitable for maritime climates
OPTIONS	Safety Boom Lift for equipment
	Lift limitation / stick limitation adjustable to the stop settings
	LED lighting
	Stick mounted camera
	Special port equipment with increased load capacities

OPERATING DATA

REACH	up to 29 m
OPERATING WEIGHT	140 – 170 t, depending on model and equipment
NOTE	Operating weight varies by model and equipment.

Option:
quick coupler

Optional:
Port equipment

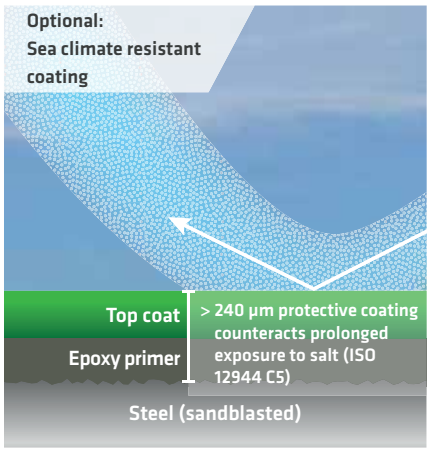

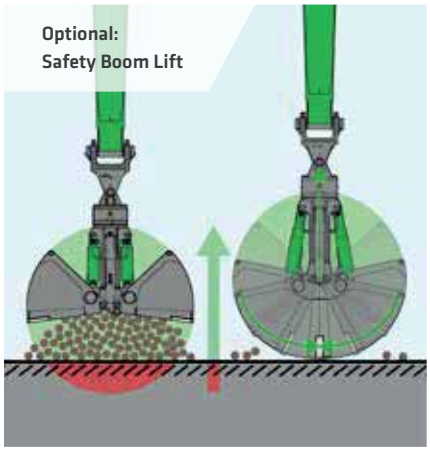

LOAD RATINGS K21 HEAVY LIFT

The load ratings are given as information only. Please contact our regional sales partners or portdivision@sennebogen.de for a detailed project study.

R 147/580

MAXCAB INDUSTRY
can be elevated by 3 m and moved forward 2.60 m

12 m boom
10 m grab stick

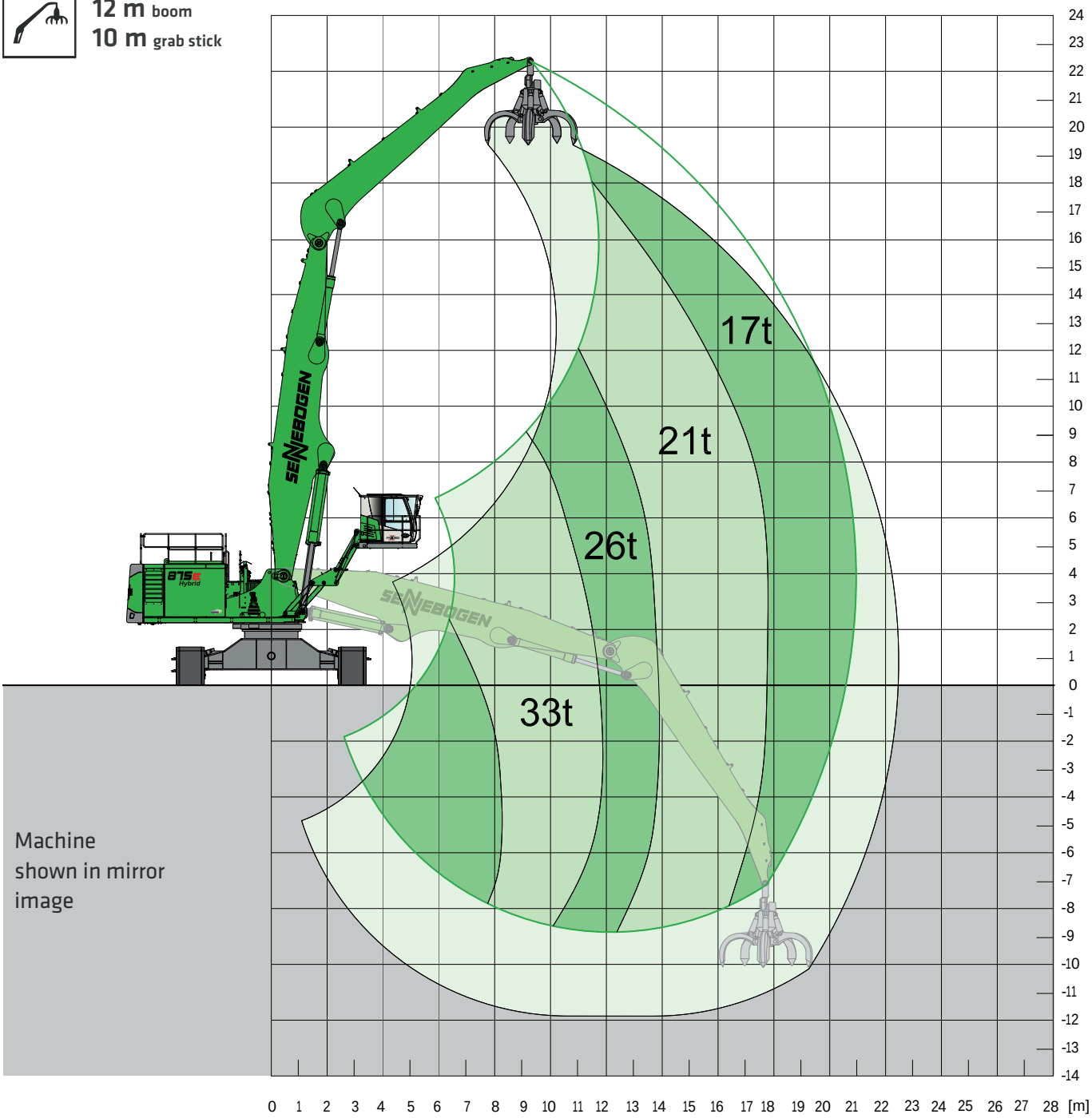

20201105140145

Notes:
All load ratings are given in tons (t) brought to bear at the end of the stick, without tools on firm level ground. Working tools such as grab, magnet, load-hook etc. are included in the specified load ratings. The stated values are 75 % of the static tipping load and 87 % of the hydraulic lifting force in accordance with ISO 10567 and apply after the required operating temperature has been reached in the Green Hybrid system. According to EU standard EN 474/5, material handling equipment used for hoisting must be equipped with a pipe rupture safety device on the lifting cylinder and an overload warning device. The specified load ratings apply to maximum track width and 360° slewing.

Subject to technical changes.

LOAD RATINGS K29 PORT

The load ratings are given as information only. Please contact our regional sales partners or portdivision@sennebogen.de for a detailed project study.

P 156/580

SKYLIFT 900 WITH MASTERCAB, hydraulically elevating (option)

16 m boom
14.5 m grab stick

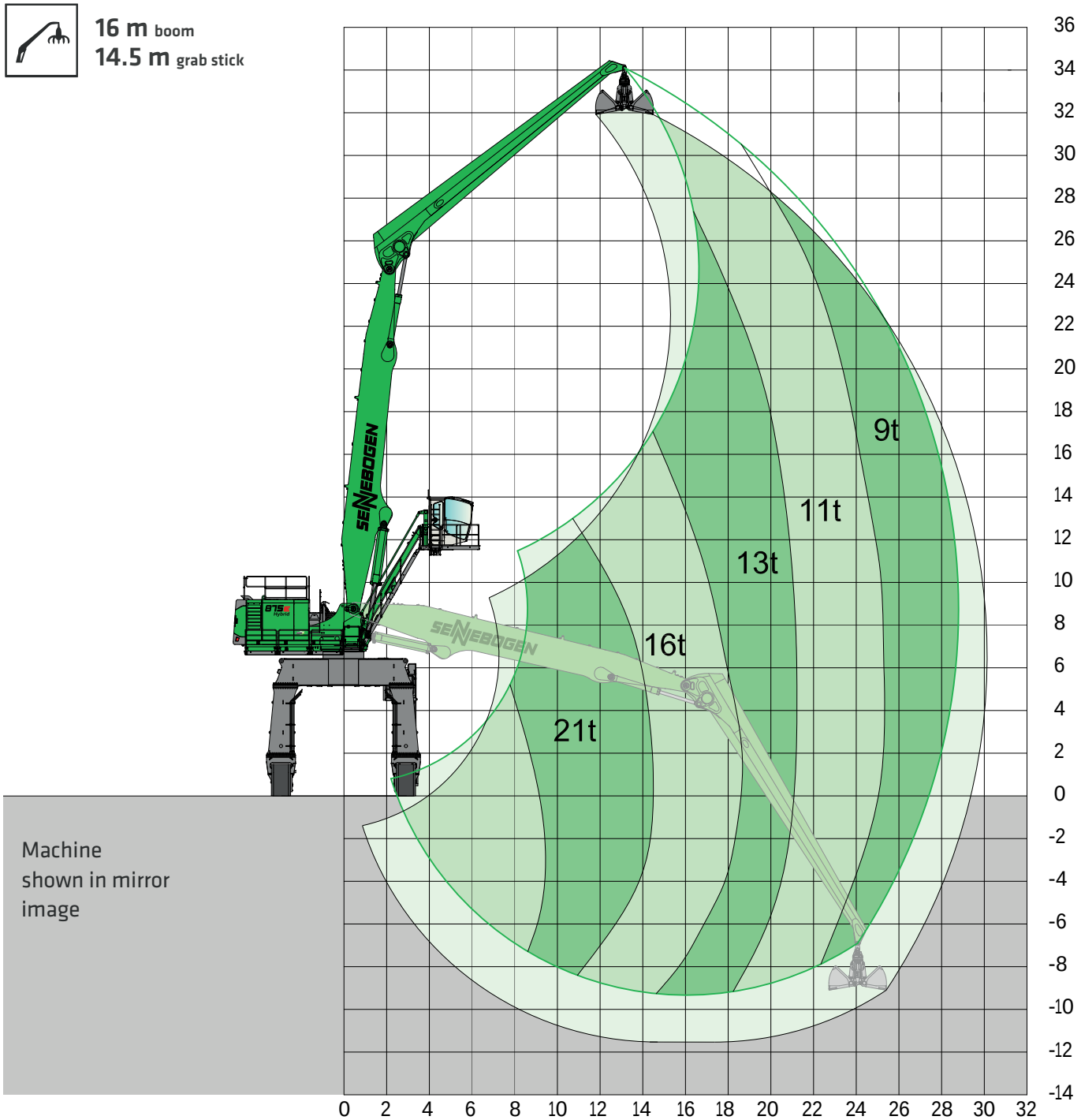

20180214174159

Notes:
All load ratings are given in tons (t) brought to bear at the end of the stick, without tools on firm level ground. Working tools such as grab, magnet, load-hook etc. are included in the specified load ratings. The stated values are 75 % of the static tipping load and 87 % of the hydraulic lifting force in accordance with ISO 10567 and apply after the required operating temperature has been reached in the Green Hybrid system. According to EU standard EN 474/5, material handling equipment used for hoisting must be equipped with a pipe rupture safety device on the lifting cylinder and an overload warning device. The specified load ratings apply to maximum track width and 360° slewing.

LOAD RATINGS B26 MOBILE GANTRY

The load ratings are given as information only. Please contact our regional sales partners or portdivision@sennebogen.de for a detailed project study.

PM150

SKYLIFT 900 WITH MASTERCAB, hydraulically elevating (option)

14.5 m boom
13.5 m grab stick

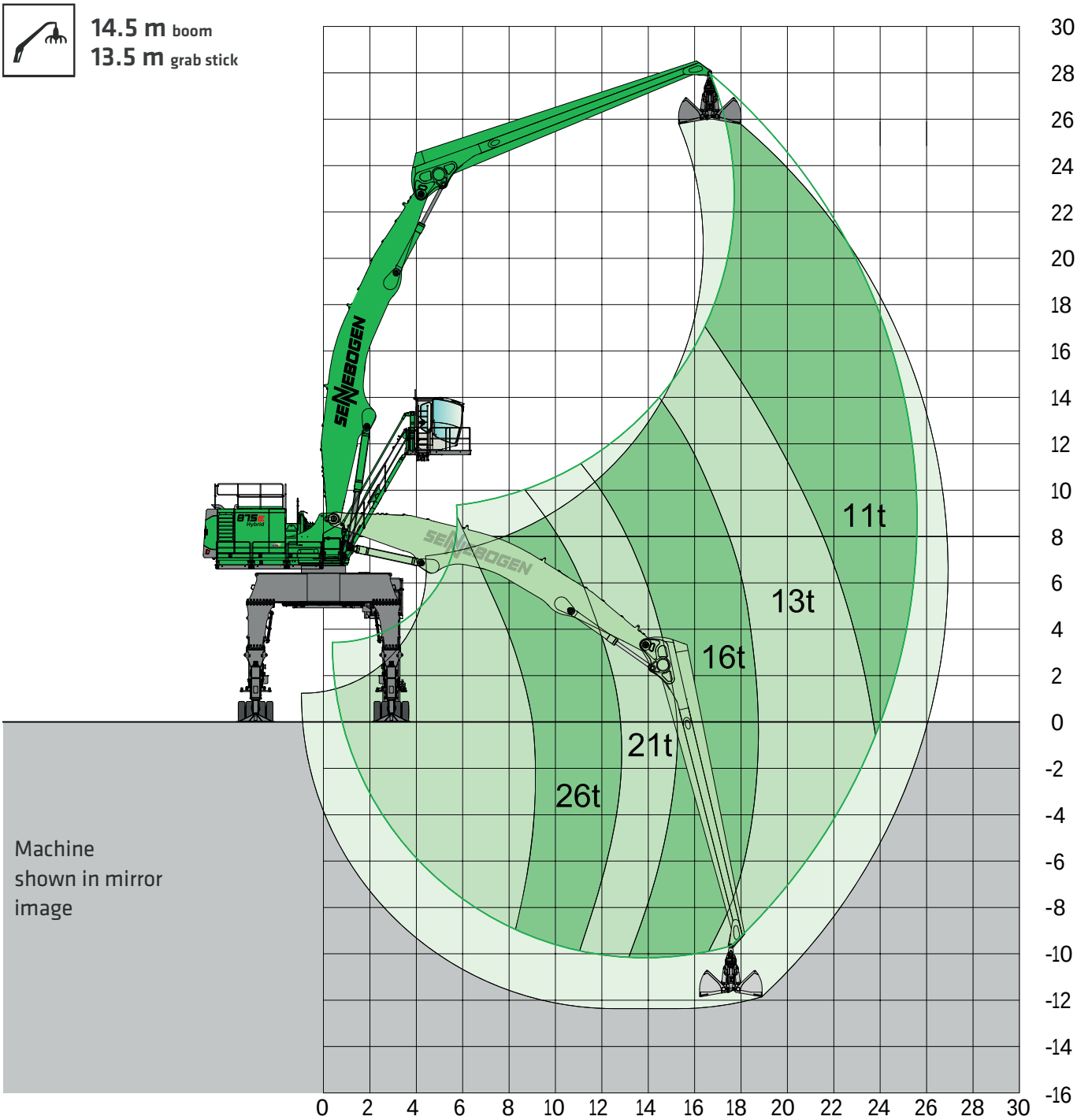

20180316111858

Notes:
All load ratings are given in tons (t) brought to bear at the end of the stick, without tools on firm level ground. Working tools such as grab, magnet, load-hook etc. are included in the specified load ratings. The stated values are 75 % of the static tipping load and 87 % of the hydraulic lifting force in accordance with ISO 10567 and apply after the required operating temperature has been reached in the Green Hybrid system. According to EU standard EN 474/5, material handling equipment used for hoisting must be equipped with a pipe rupture safety device on the lifting cylinder and an overload warning device. The specified load ratings apply to maximum track width and 360° slewing.

Subject to technical changes.

Mobile gantry for easy, flexible positioning on the quay

CRAWLER DIMENSION

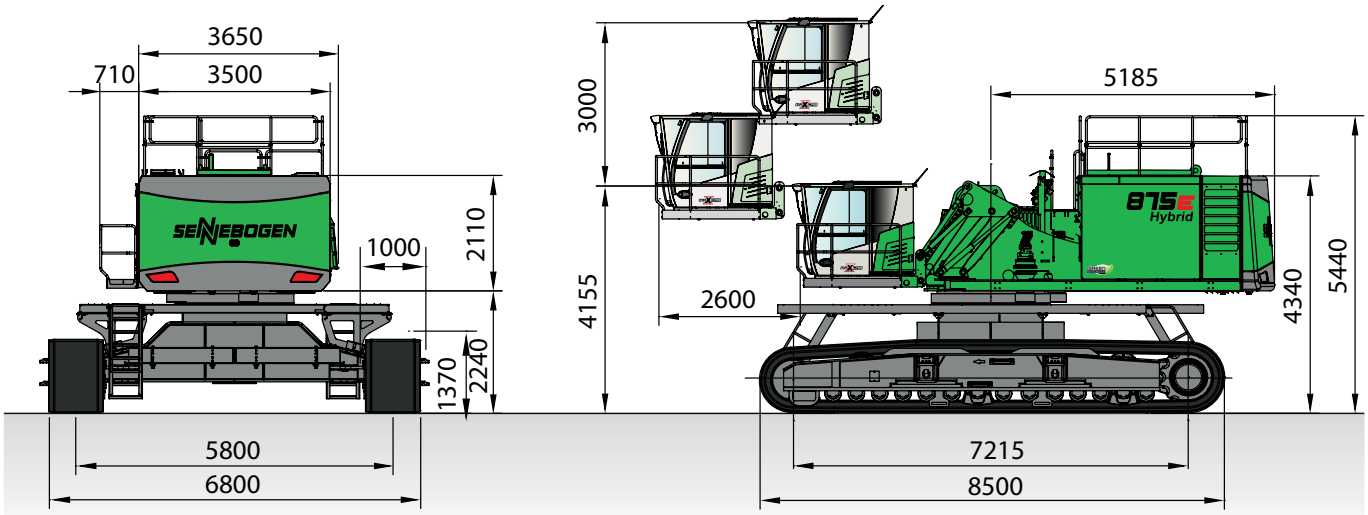

875 CRAWLER WITH R147/580 UNDERCARRIAGE AND E300/260 MAXCAB INDUSTRY (SERIES) WHICH CAN BE ELEVATED AND MOVED FORWARD HYDRAULICALLY

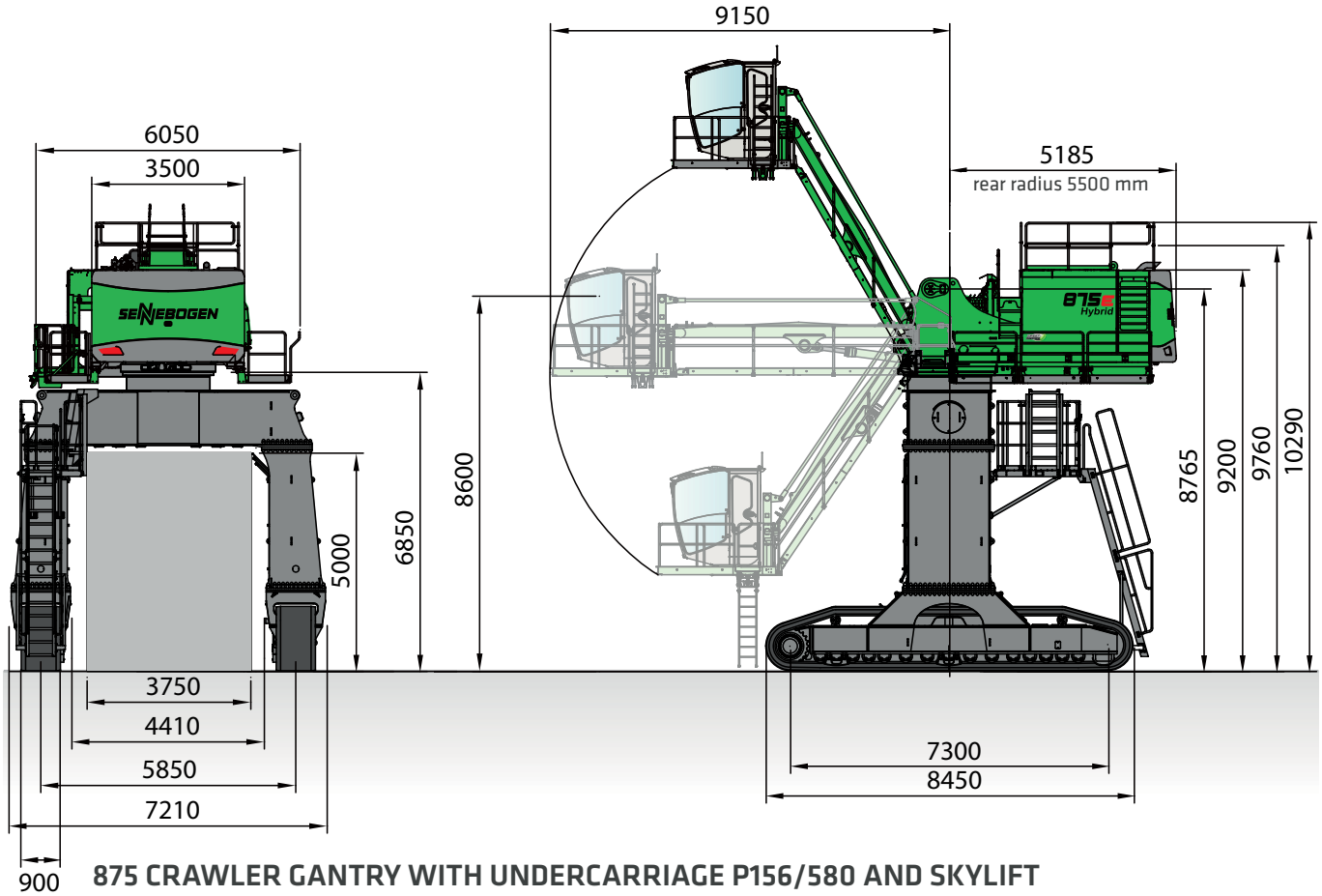

875 CRAWLER GANTRY WITH UNDERCARRIAGE P156/580 AND SKYLIFT 900 WITH MASTERCAB, HYDRAULICALLY ELEVATING

Dimensions in [mm]

Subject to technical changes.

MOBILE DIMENSIONS

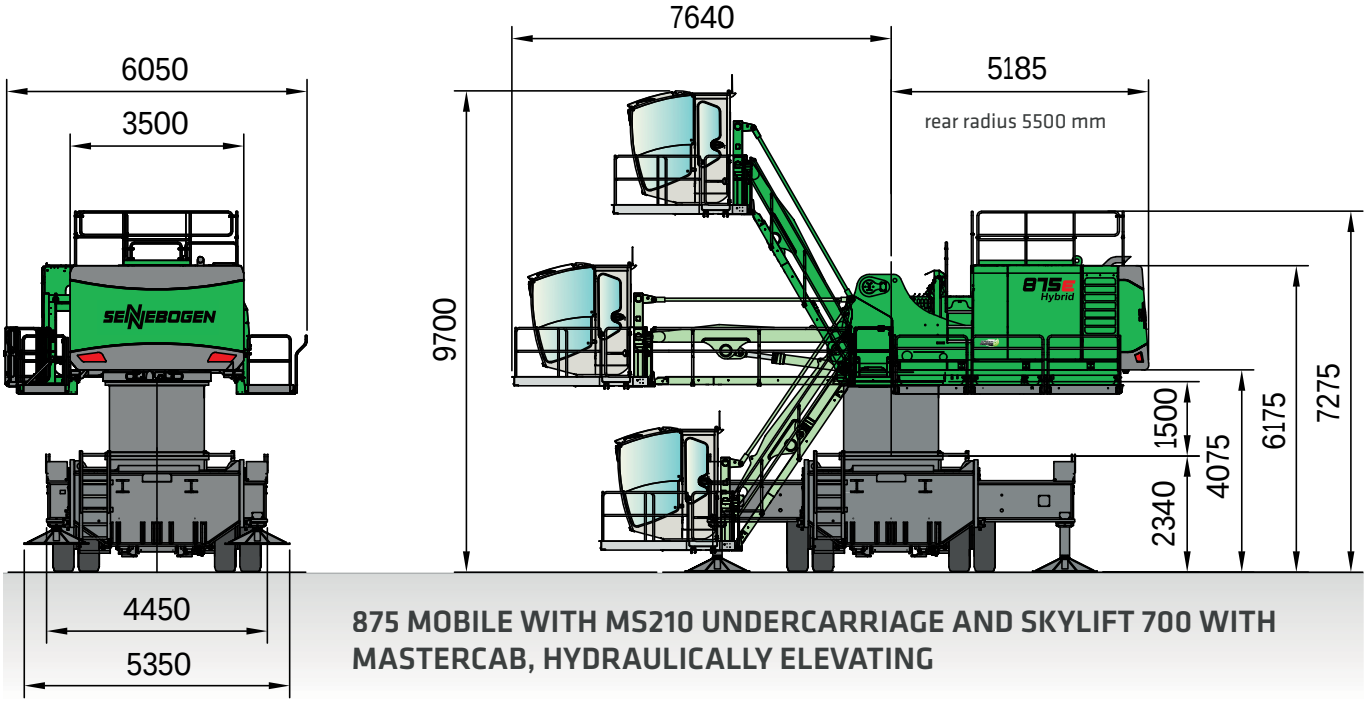

875 MOBILE WITH MS210 UNDERCARRIAGE AND SKYLIFT 700 WITH MASTERCAB, HYDRAULICALLY ELEVATING

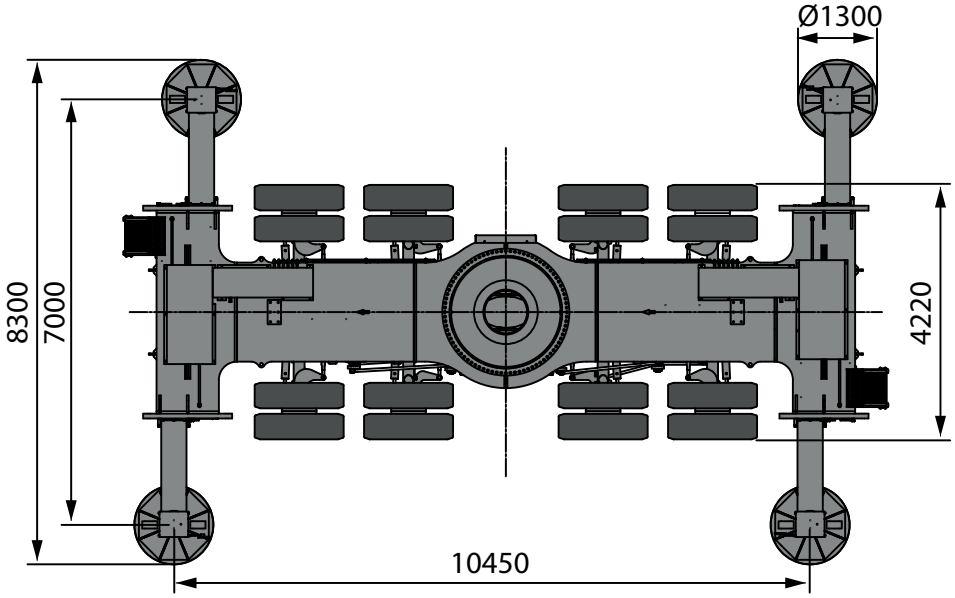

MS210 MOBILE UNDERCARRIAGE

MOBILE GANTRY DIMENSIONS

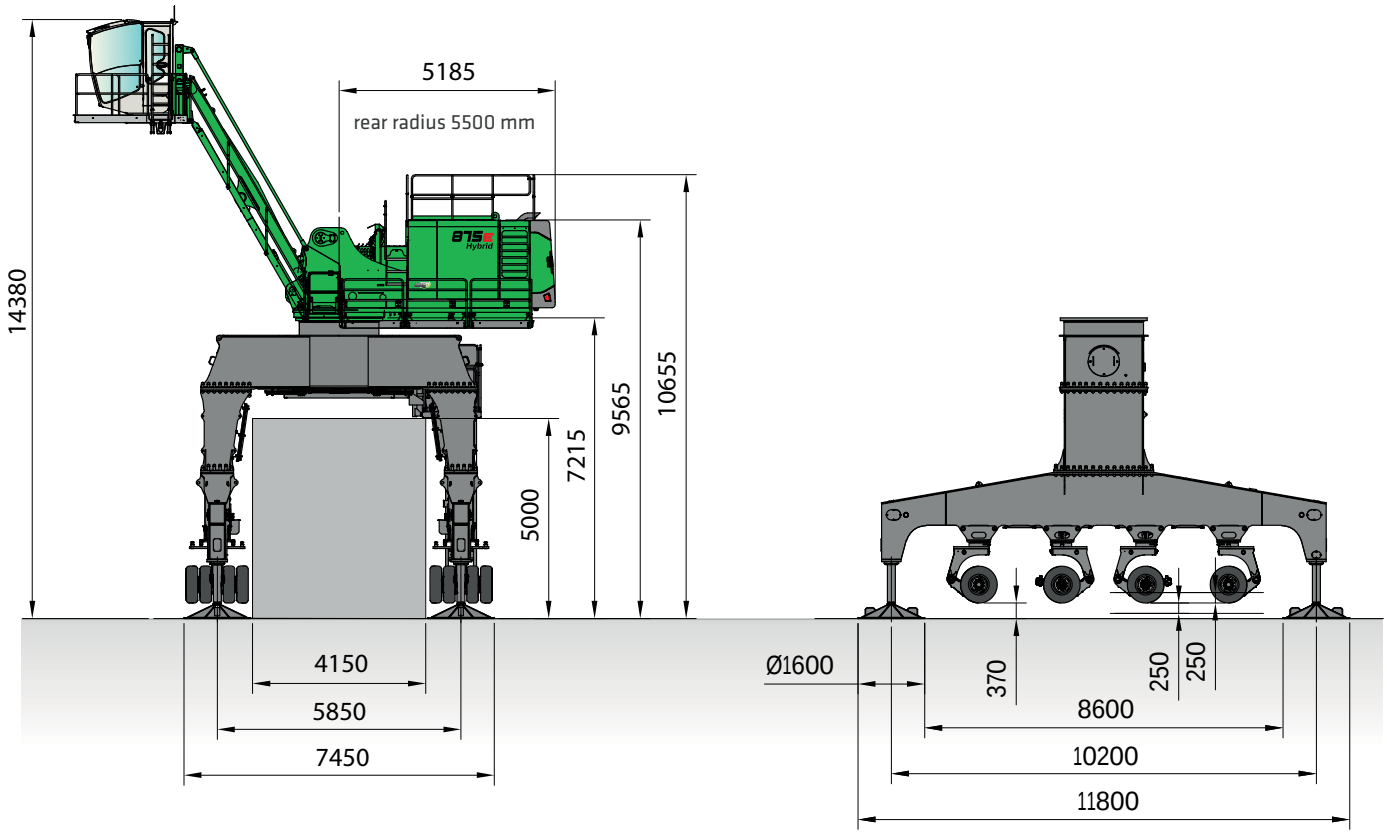

875 MOBILE GANTRY WITH PM150 UNDERCARRIAGE AND HYDRAULICALLY ELEVATING SKYLIFT 900 CAB ELEVATION AND MASTERCAB

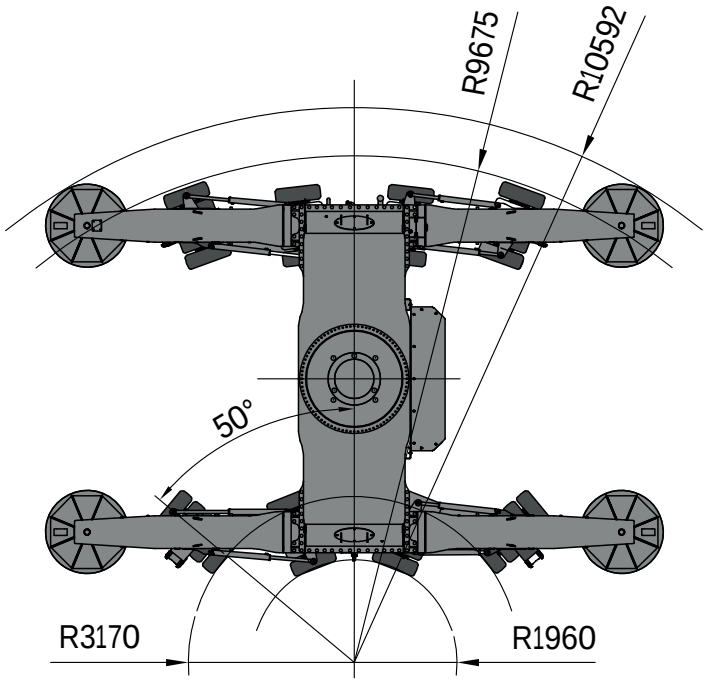

PM150 UNDERCARRIAGE

Dimensions in [mm]

Subject to technical changes.

4-POINT-PEDESTAL DIMENSIONS

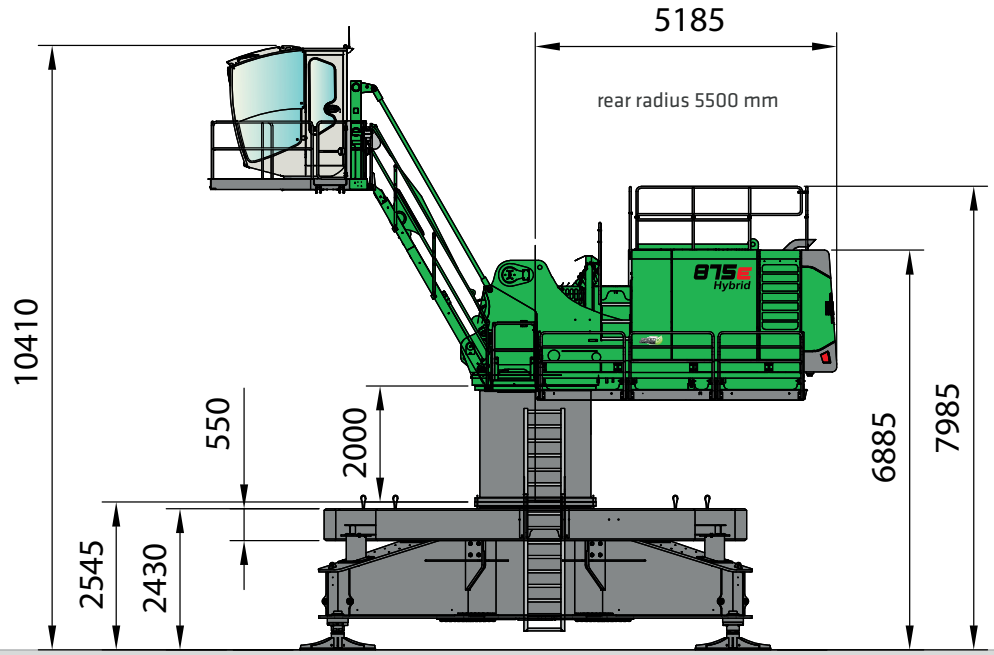

875 STATIONARY ON 4-POINT-PEDESTAL ST98 WITH 2 m PYLON, HYDRAULICALLY ELEVATING SKYLIFT 700 CAB ELEVATION AND MASTERCAB

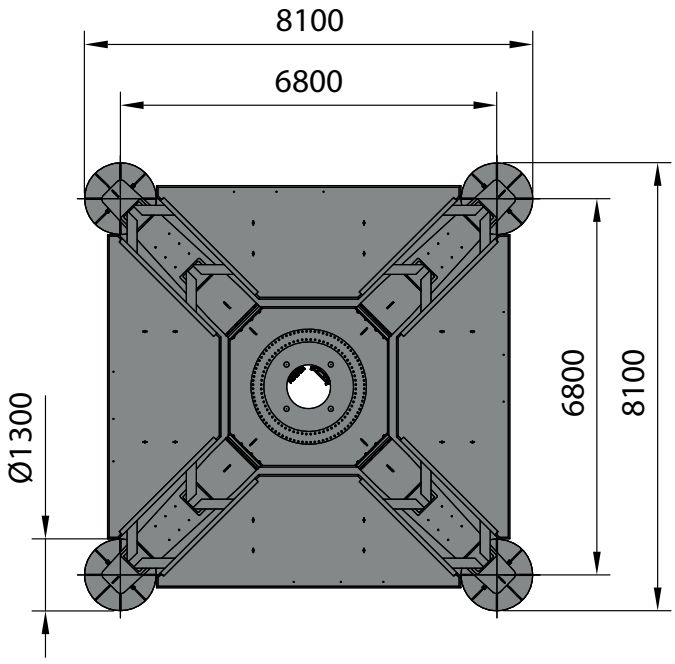

ST98 4-POINT-PEDESTAL

Customised rail gantry with electric drive, adapted to the specific rail track width in the port; Switzerland

VARO

SENNEBOGEN ACADEMY

Anxious to expand knowledge as success is based on knowledge. In the SENNEBOGEN Academy we place great importance on ensuring knowledge flows powerfully.

www.sennebogen-academy.com

SERVICE AND MAINTENANCE

Comprehensive customer service. And supply of spare parts. Service is a TOP priority for us.

www.sennebogen.com/customer-service

SENtrack

Manage your fleet efficiently with SENtrack: Use information that would otherwise stay hidden and increase your efficiency.

www.sennebogen.com/sentrack

RENTAL & USED

Discover the unique range of rental machines available from SENNEBOGEN Rental & Used. Rental machines can be found here:

www.sennebogen-rental-used.com

JOIN OUR OPERATORS' CLUB

The spotlight is on you and your machine! We focus on exclusive information, sharing experiences with other SENNEBOGEN operators as well as fun and enthusiasm.

Find out about all the benefits here

www.sennebogen.com/operators-club

MOVE BIG THINGS – WITH US!

over 69
years of experience

100 %
family company

over 1600
experienced specialists worldwide

4
production plants in Germany

over 180
sales and service partners around the world

26
different Material handlers

Telehandler	Balancer	Material handler	Duty cycle crane	Crawler crane	Telecrane	Port crane
4.0-5.5 t	130-300 t	17-420 t	13.5-300 t	50-300 t	16-130 t	300 t

875E | Hybrid

Order no. 299056
875-E-072ldu

This catalog describes machine models, the scope of equipment of individual models, and configuration options (standard equipment and optional equipment) of the machines delivered by SENNEBOGEN Maschinenfabrik GmbH. Machine illustrations may contain optional and supplementary equipment. Actual equipment may vary depending on the country to which the machines are delivered, especially in regard to standard and optional equipment. All product designations used may be trademarks of SENNEBOGEN Maschinenfabrik GmbH or other supplying companies, and any use by third parties for their own purposes may violate the rights of the owners.

Please contact your local SENNEBOGEN sales partner for information concerning the equipment variants offered. Requested performance characteristics are only binding if they are expressly stipulated upon conclusion of the contract. Delivery options and technical features are subject to change. All information is supplied without liability. Equipment is subject to change, and rights of advancement are reserved. © SENNEBOGEN Maschinenfabrik GmbH, Straubing, Germany. Reproduction in whole or in part only with written consent of SENNEBOGEN Maschinenfabrik GmbH, Straubing, Germany.

SENNEBOGEN
Maschinenfabrik GmbH
Hebbelstraße 30
94315 Straubing, Germany

www.sennebogen.com

MOVE BIG THINGS

SALES SENNEBOGEN
Green Line Sales
Tel. +49 9421 540-146
materialhandling@sennebogen.de

SPARE PARTS CENTER
Spare parts orders
spareparts@sennebogen.de

AFTER SALES
Technical support
service@sennebogen.de